ENGINE SECTION 1

This service manual has been prepared to provide SUBARU service personnel with the necessary information and data for the correct maintenance and repair of SUBARU vehicles.
This manual includes the procedures for maintenance, disassembling, reassembling, inspection and adjustment of components and diagnostics for guidance of experienced mechanics.
Please peruse and utilize this manual fully to ensure complete repair work for satisfying our customers by keeping their vehicle in optimum condition. When replacement of parts during repair work is needed, be sure to use SUBARU genuine parts.

All information, illustration and specifications contained in this manual are based on the latest product information available at the time of publication approval.

ENGINE SECTION 1

FUEL INJECTION (FUEL SYSTEMS)

FU(H4SO)

14.Front Oxygen (A/F) Sensor

A: REMOVAL

1) Disconnect the ground cable from battery.

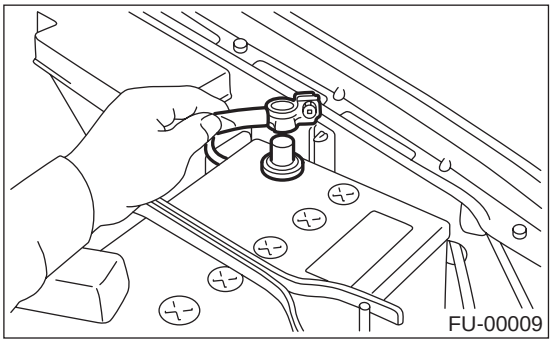

2) Disconnect the connector from engine hanger, and then disconnect the connector from front oxygen (A/F) sensor.

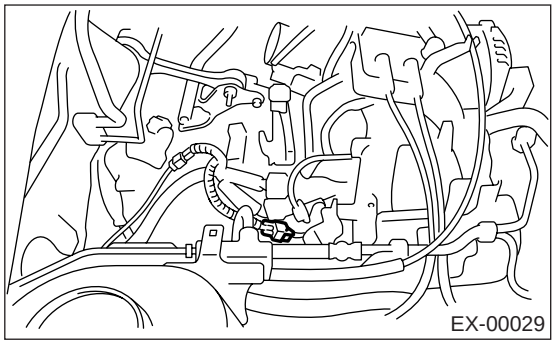

3) Lift-up the vehicle.
4) Apply SUBARU CRC or its equivalent to the threaded portion of front oxygen (A/F) sensor, and leave it for one minute or more.

SUBARU CRC (Part No. 004301003)

5) Remove the front oxygen (A/F) sensor.

CAUTION:
When removing the oxygen (A/F) sensor, wait until exhaust pipe cools, otherwise it will damage exhaust pipe.

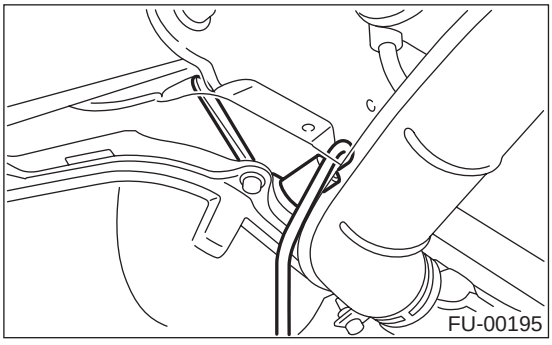

B: INSTALLATION

1) Before installing front oxygen (A/F) sensor, apply the anti-seize compound only to the threaded portion of front oxygen (A/F) sensor to make the next removal easier.

Anti-seize compound:
SS-30 by JET LUBE

CAUTION:
Never apply anti-seize compound to protector of front oxygen (A/F) sensor.

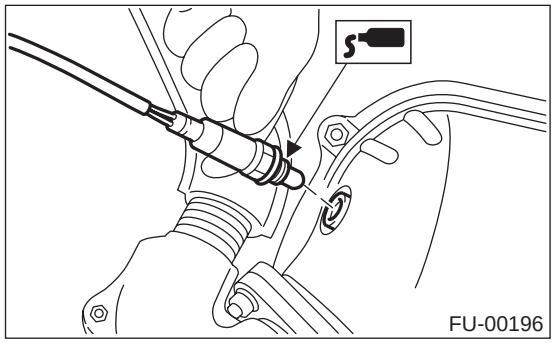

2) Install the front oxygen (A/F) sensor.

Tightening torque:
21 N·m (2.1 kgf-m, 15.2 ft-lb)

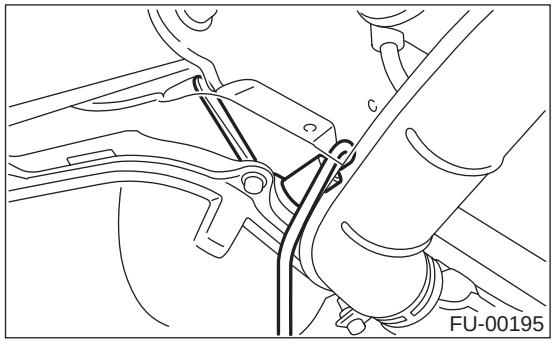

3) Lower the vehicle.
4) Connect the connector to front oxygen (A/F) sensor, and then connect the connector to engine hanger.

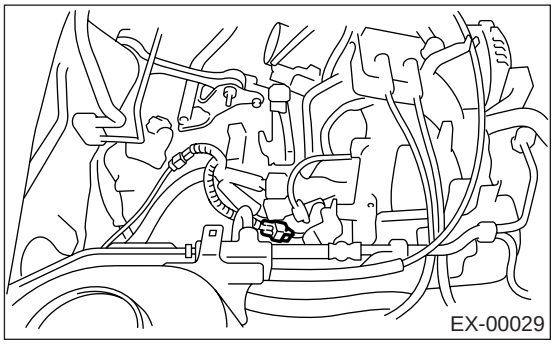

5) Connect the battery ground cable to battery.

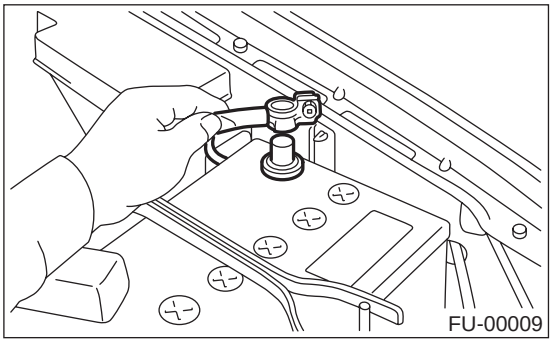

15.Rear Oxygen Sensor

A: REMOVAL

1) Disconnect the ground cable from battery.

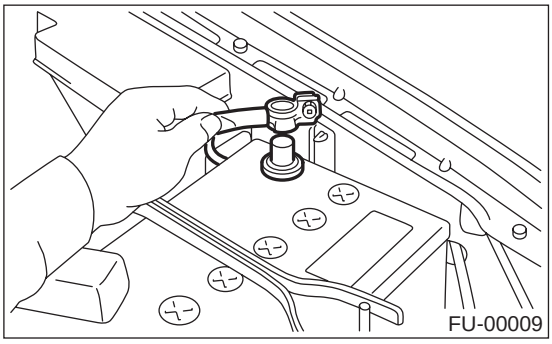

2) Lift-up the vehicle.
3) Disconnect the connector from the rear oxygen sensor.

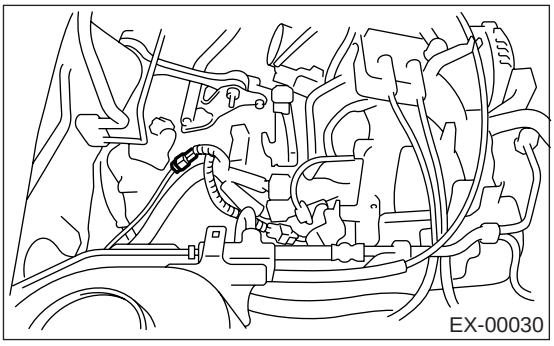

4) Apply SUBARU CRC or its equivalent to the threaded portion of rear oxygen sensor, and leave it for one minute or more.

SUBARU CRC (Part No. 004301003)

5) Remove the rear oxygen sensor.

CAUTION:
When removing the oxygen sensor, wait until exhaust pipe cools, otherwise it will damage exhaust pipe.

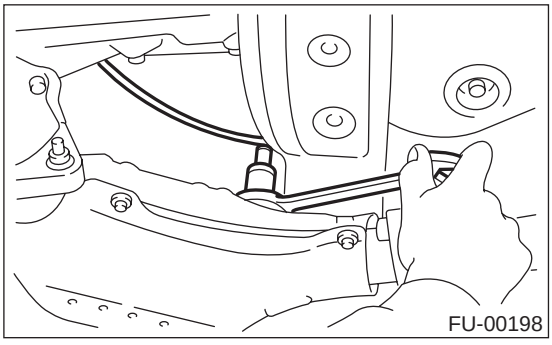

B: INSTALLATION

1) Before installing rear oxygen sensor, apply the anti-seize compound only to the threaded portion of rear oxygen sensor to make the next removal easier.

CAUTION:
Never apply anti-seize compound to protector of rear oxygen sensor.

Anti-seize compound:
SS-30 by JET LUBE

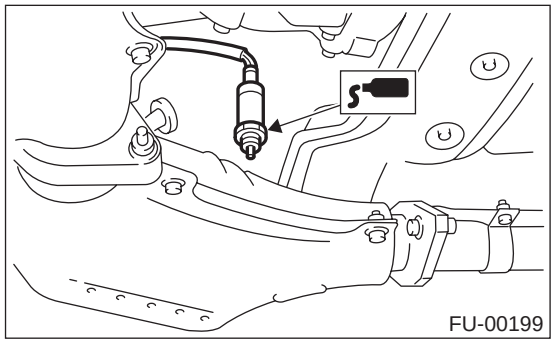

2) Install the rear oxygen sensor.

Tightening torque:
21 N·m (2.1 kgf-m, 15.2 ft-lb)

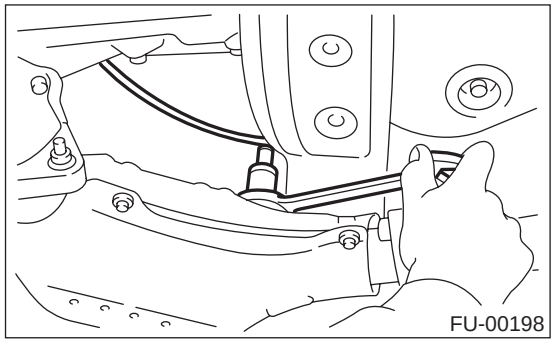

3) Connect the connector to the rear oxygen sensor.

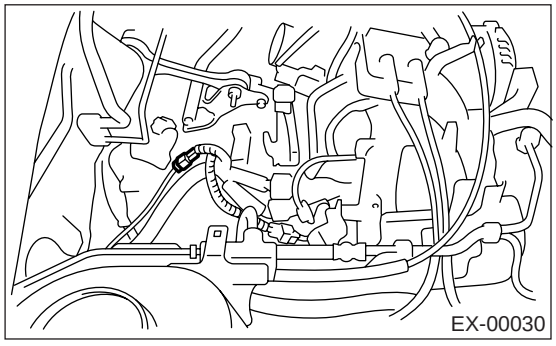

4) Lower the vehicle.

5) Connect the battery ground cable to battery.

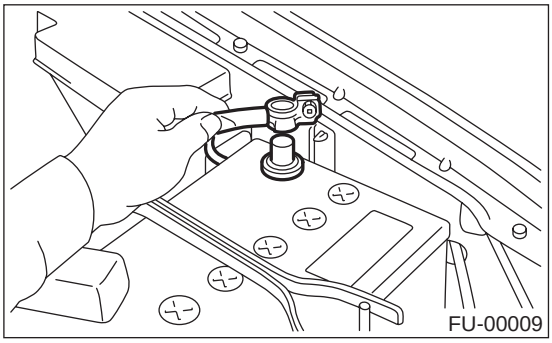

16.Engine Control Module

A: REMOVAL

1) Disconnect the ground cable from battery.

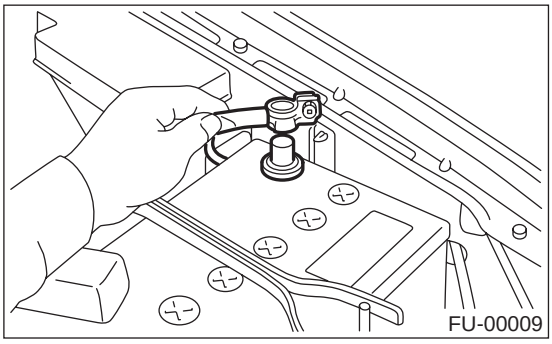

2) Remove the lower inner trim of passenger side.
<Ref. to EI-39, REMOVAL, Lower Inner Trim.>
3) Detach the floor mat of front passenger seat.
4) Remove the protect cover.

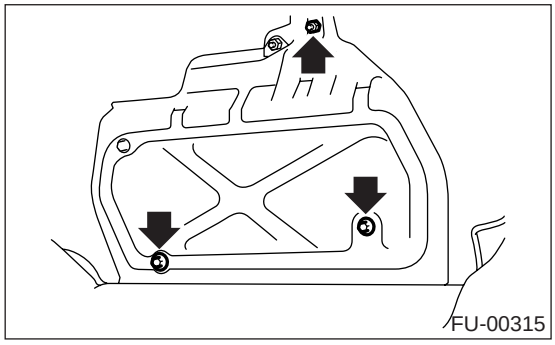

5) Remove the nuts (A) which hold ECM to the bracket.
6) Remove the clip (B) from the bracket.

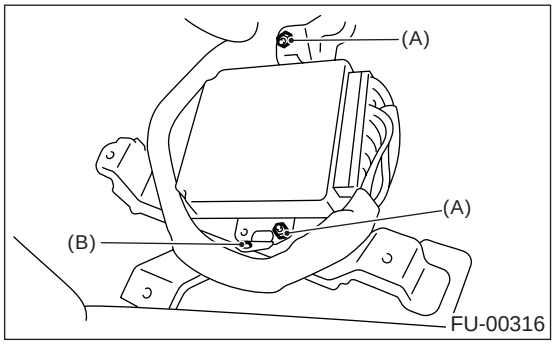

7) Disconnect the ECM connectors and take out the ECM.

B: INSTALLATION

Install in the reverse order of removal.

CAUTION:
When replacing ECM, be careful not to use the wrong spec. ECM to avoid any damage to the fuel injection system.

Tightening torque:
5 N·m (0.51 kgf-m, 3.7 ft-lb)

17.Main Relay

A: REMOVAL

1) Disconnect the ground cable from battery.

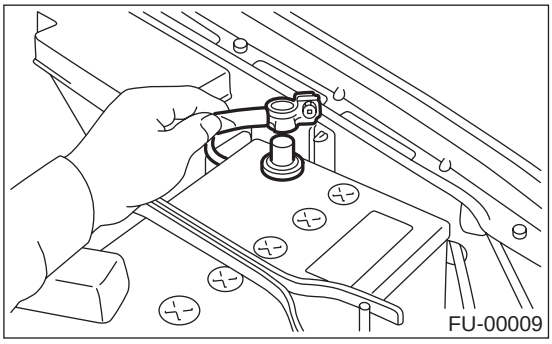

2) Remove the passenger's side front side sill cover.
3) Remove the bolt which holds main bracket on the body.
4) Disconnect the connectors from the main relay.

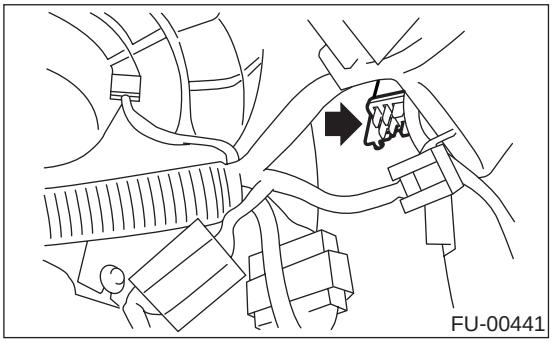

B: INSTALLATION

Install in the reverse order of removal.

18.Fuel Pump Relay

A: REMOVAL

1) Disconnect the ground cable from battery.

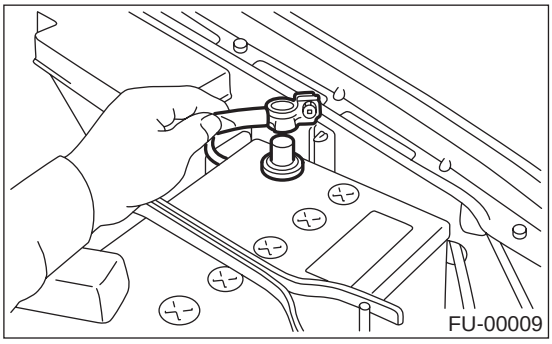

2) Remove the passenger's side front side sill cover.
3) Remove the bolt which holds fuel pump relay bracket on the body.
4) Disconnect the connector from the fuel pump.

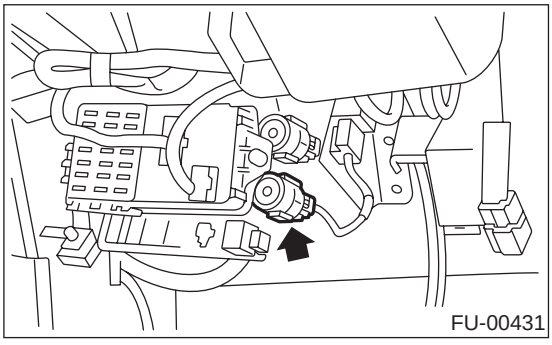

5) Remove the fuel pump relay from the mounting bracket.

B: INSTALLATION

Install in the reverse order of removal.

19.Fuel

A: OPERATION

1. RELEASING OF FUEL PRESSURE

WARNING:
- **Place “NO FIRE” signs near the working area.**
- **Be careful not to spill fuel on the floor.**

1) Disconnect the connector from fuel pump relay (A).

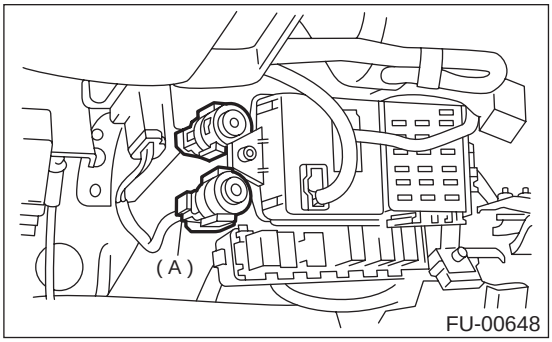

2) Start the engine and run it until it stalls.
3) After the engine stalls, crank it for 5 more seconds.
4) Turn the ignition switch to OFF.

2. DRAINING FUEL

WARNING:
- **Place “NO FIRE” signs near the working area.**
- **Be careful not to spill fuel on the floor.**

1) Set the vehicle on the lift.
2) Disconnect the ground cable from battery.

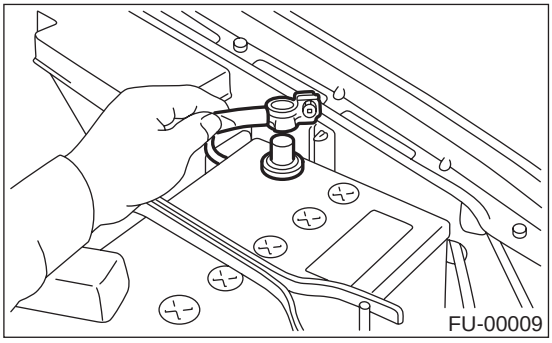

3) Lift-up the vehicle.

4) Remove the protector RH (Front).

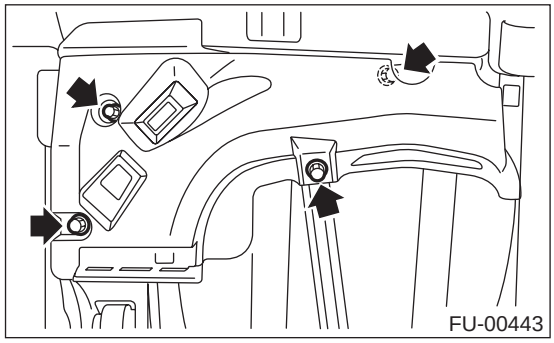

5) Drain the fuel from fuel tank.
Set a container under the vehicle, and then remove the drain plug from fuel tank.

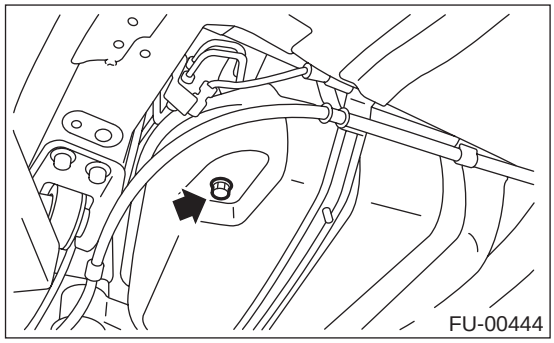

6) Tighten the fuel drain plug, and then install the protector RH (Front).

Tightening torque:
26 N·m (2.65 kgf-m, 19.2 ft-lb)

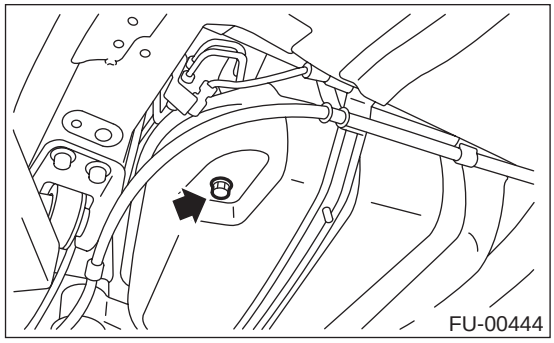

Tightening torque:
18 N·m (1.8 kgf-m, 13.0 ft-lb)

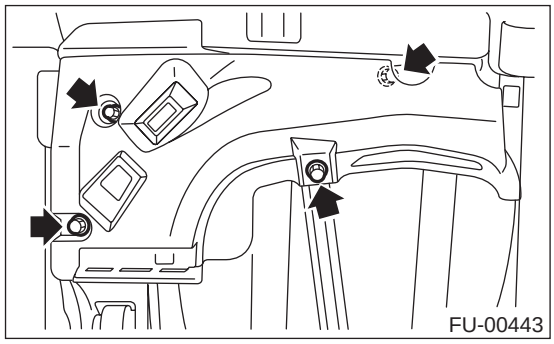

7) Lower the vehicle.
8) Remove the sub service hole cover.

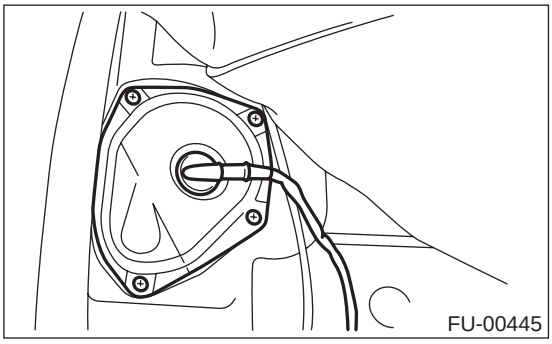

9) Disconnect the connector from fuel sub level sensor.

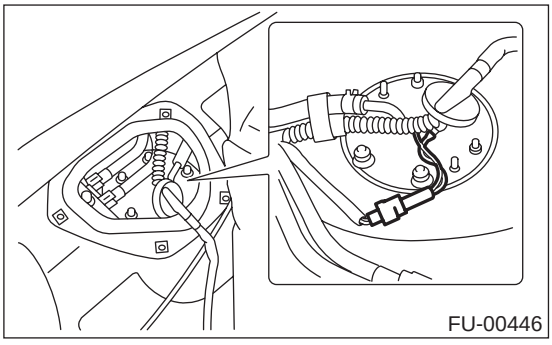

10) Disconnect the fuel jet pump hose.

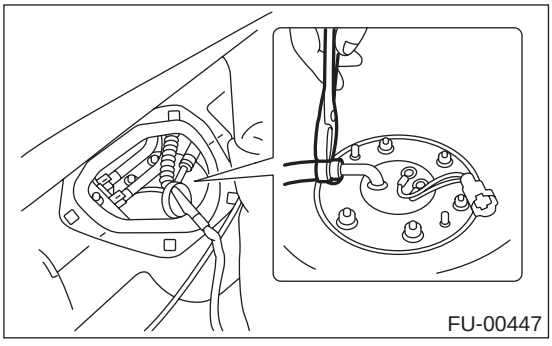

11) Remove the fuel sub level sensor.

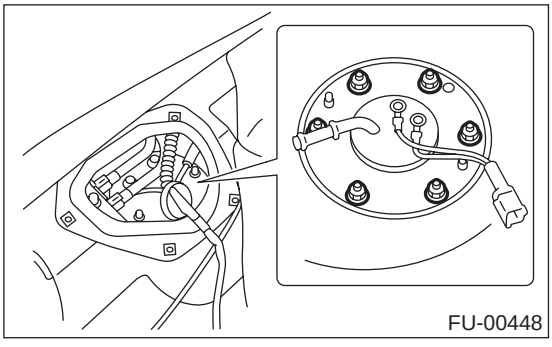

12) Drain the fuel from fuel tank by using a hand pump.

WARNING:
Do not use a motor pump when draining the fuel.

13) After draining the fuel, reinstall the fuel sub level sensor.

Tightening torque:
T: 4.4 N·m (0.45 kgf-m, 3.3 ft-lb)

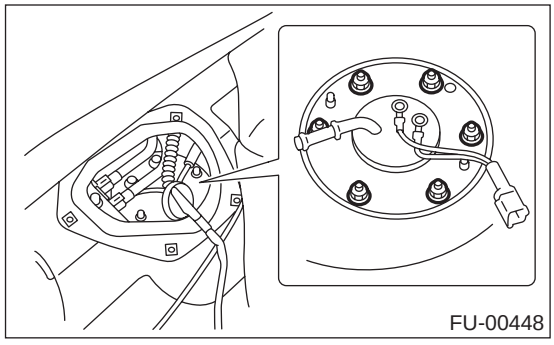

NOTE:
If you have not removed the fuel tank yet, proceed with the procedure below for installation.

(1) Connect the fuel jet pump hose.

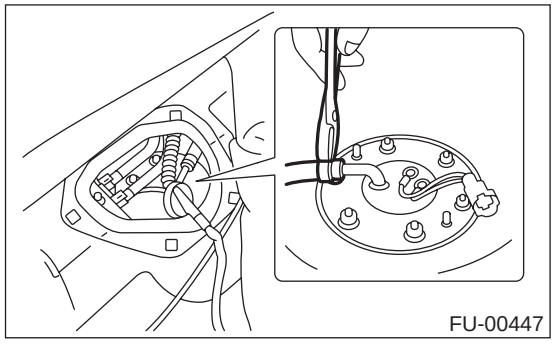

(2) Connect the connector from fuel sub level sensor.

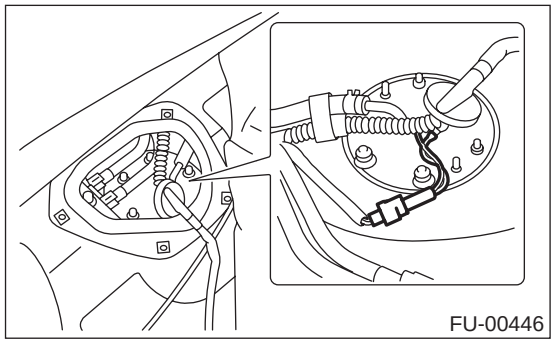

(3) Install the sub service hole cover.

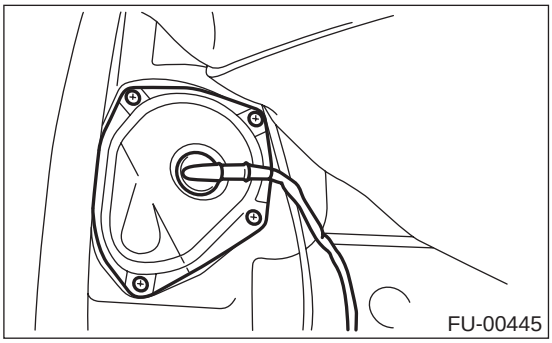

(4) Set the rear seat and floor mat.

20.Fuel Tank

A: REMOVAL

1) Set the vehicle on the lift.
2) Release the fuel pressure. <Ref. to FU(H4SO)-48, RELEASING OF FUEL PRESSURE, OPERATION, Fuel.>
3) Drain the fuel from fuel tank. <Ref. to FU(H4SO)-48, DRAINING FUEL, OPERATION, Fuel.>
4) Remove the holder clip which secures fuel tank cord on bracket.

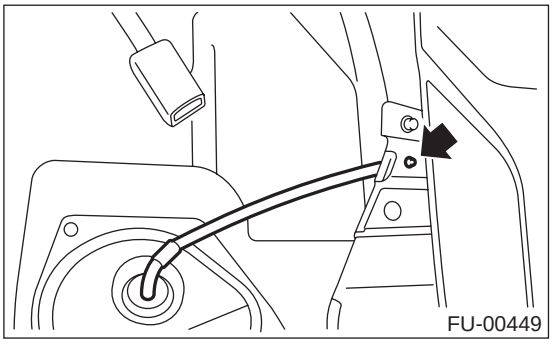

5) Disconnect the connector of fuel tank cord to rear harness.

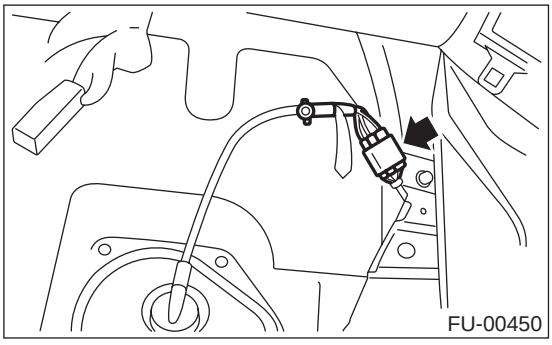

6) Push the grommet which holds fuel tank cord on service hole cover into body side.

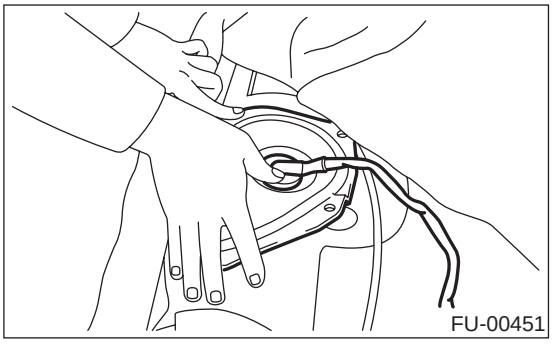

7) Separate the quick connector of fuel delivery (A) and return hose (B).<Ref. to FU(H4SO)-70, REMOVAL, Fuel Delivery, Return and Evaporation Lines.>

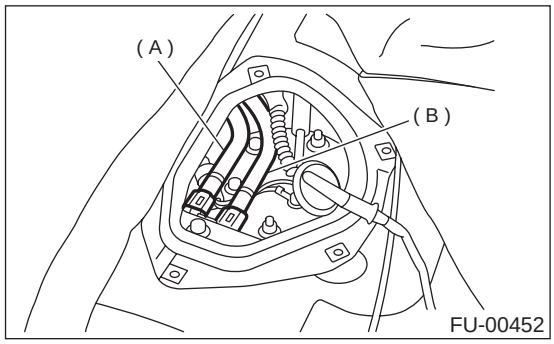

8) Remove the parking brake cable.
   (1) Remove the console box. <Ref. to EI-34, REMOVAL, Console Box.>
   (2) Remove the parking brake bracket, and then disconnect the parking brake cable from equalizer. <Ref. to PB-7, REMOVAL, Parking Brake Cable.>
9) Remove the wheel nuts from rear wheels.
10) Lift-up the vehicle.
11) Remove the rear wheel.
12) Remove the front side protector.

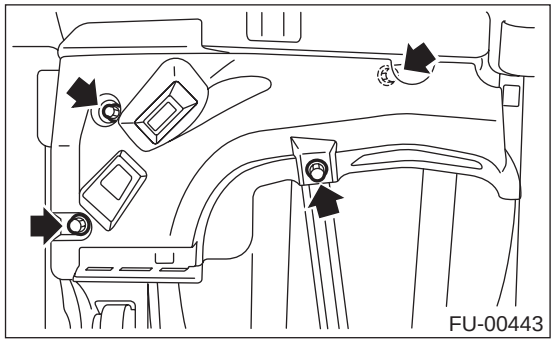

13) Remove the rear exhaust pipe and muffler.

NOTE:
To facilitate the removal, apply a coat of SUBARU CRC to matching area of rubber cushions in advance.

SUBARU CRC (Part No. 004301003)

(1) Separate the rear exhaust pipe from center exhaust pipe.

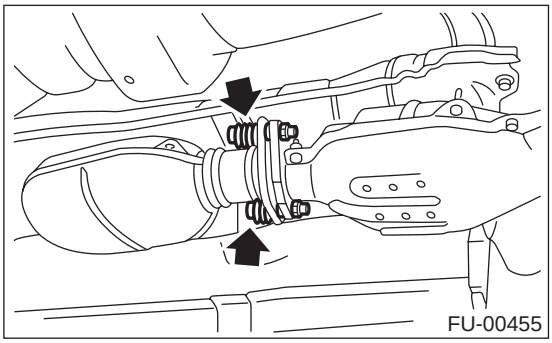

(2) Remove the right and left rubber cushions.

NOTE:
Be careful not to pull down the muffler.

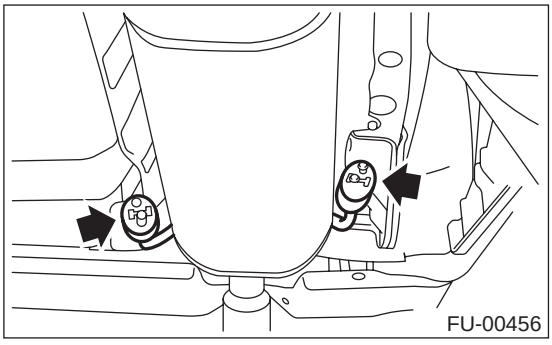

(3) Remove the front rubber cushion, and then detach the muffler assembly.

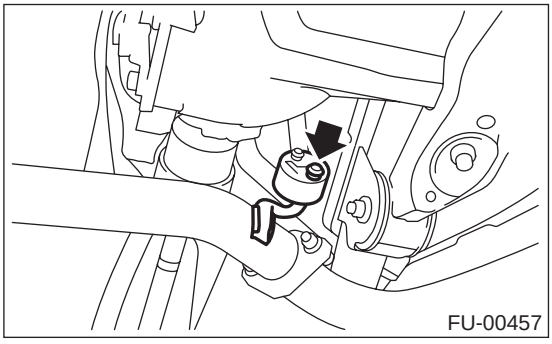

14) Remove the propeller shaft. <Ref. to DS-14, REMOVAL, Propeller Shaft.>
15) Disconnect the connector from ABS sensor.

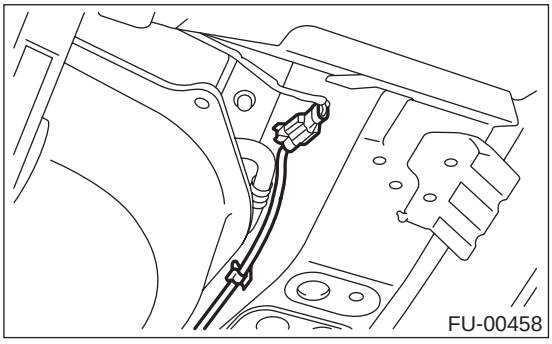

16) Remove the bolts which hold parking brake cable holding bracket.
17) Remove the parking brake cable from cabin by forcibly pulling it backward.

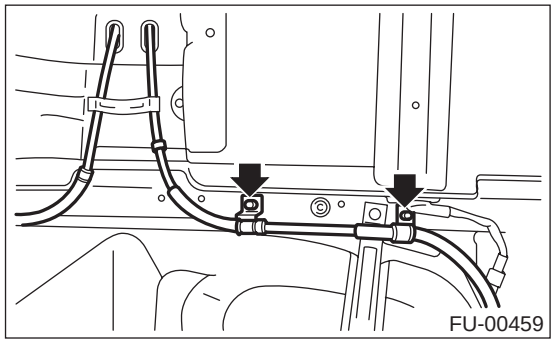

18) Remove the bolt which holds parking brake cable holding bracket.

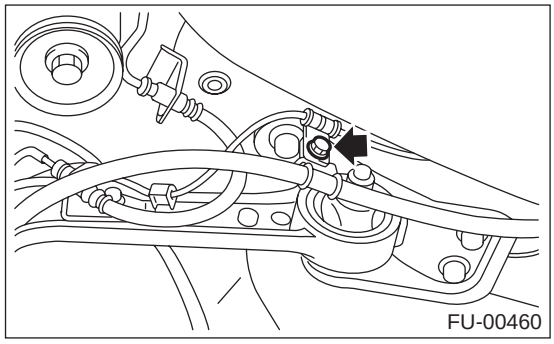

19) Remove the bolt which holds rear brake hoses holding bracket.

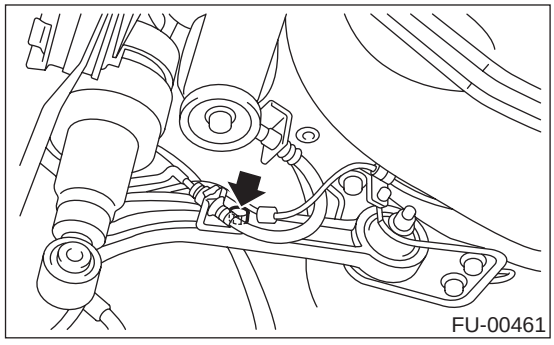

20) Remove the rear brake caliper, and then tie it up to the body side of vehicle as shown in the figure.

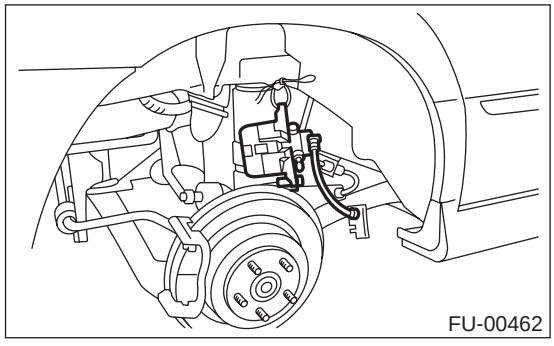

21) Remove the rear suspension assembly.

CAUTION:
A helper is required to perform this work.

(1) Support the rear differential with transmission jack.
(2) Remove the bolt which holds rear shock absorber to rear suspension arm.

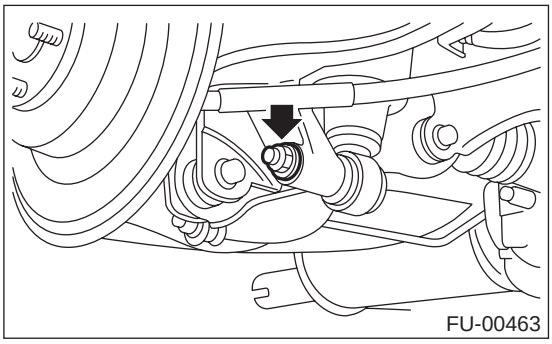

(3) Remove the bolts which secure rear suspension assembly to body.

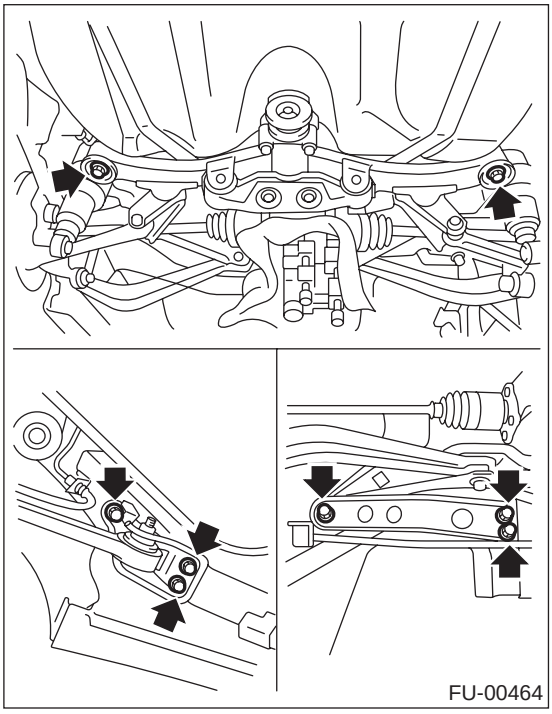

(4) Remove the rear suspension assembly.

22) Remove the rear side protector.

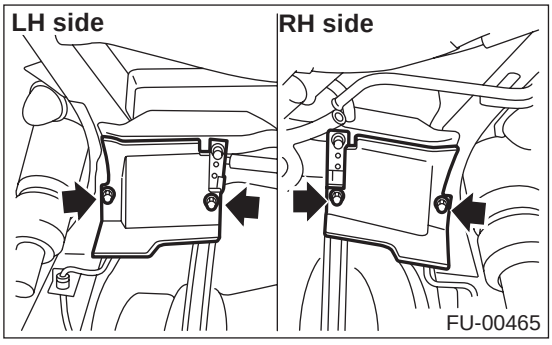

23) Disconnect the two-way vlave hose (A) from two-way valve, and then disconnect the evaporation hose (B) from evaporation pipe.

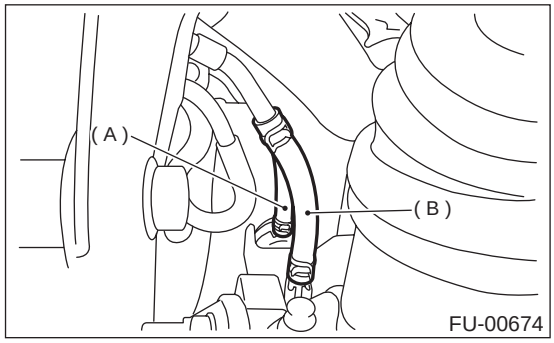

24) Loosen the clamp and disconnect the fuel filler hose (A) and air vent hose (B) from fuel filler pipe.

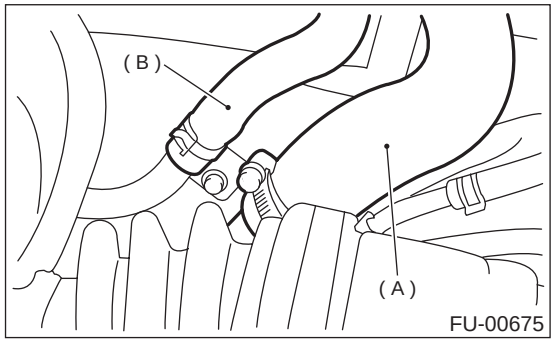

25) Support the fuel tank with transmission jack, then remove the bolts from bands and dismount fuel tank from the vehicle.

CAUTION:
A helper is required to perform this work.

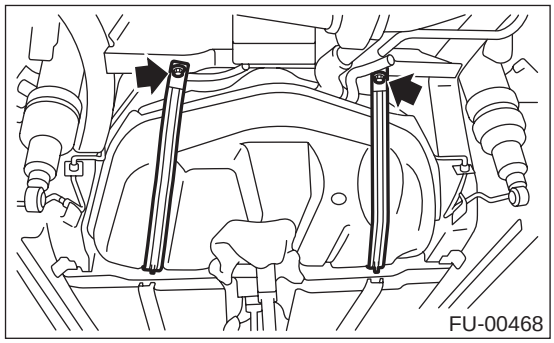

B: INSTALLATION

1) Support the fuel tank with transmission jack, and then push the fuel tank harness into access hole with grommet.
2) Set the fuel tank, and then temporarily tighten the bolts of fuel tank bands.

CAUTION:
A helper is required to perform this work.

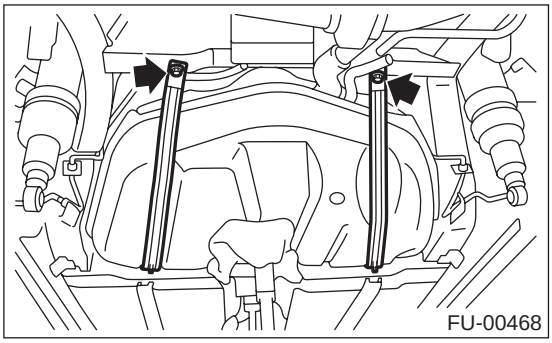

3) Connect the two-way valve hose (A) to two-way valve, and then connect the evaporation hose (B) to evaporation pipe.

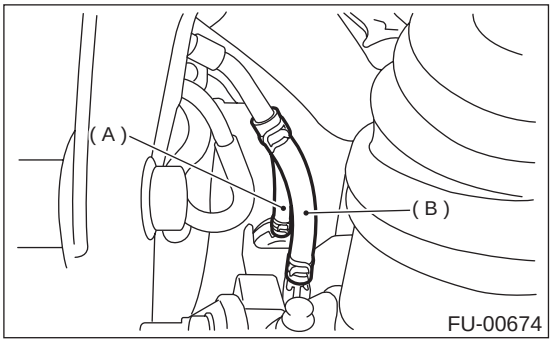

4) Connect the fuel filler hose (A) and air vent hose (B).

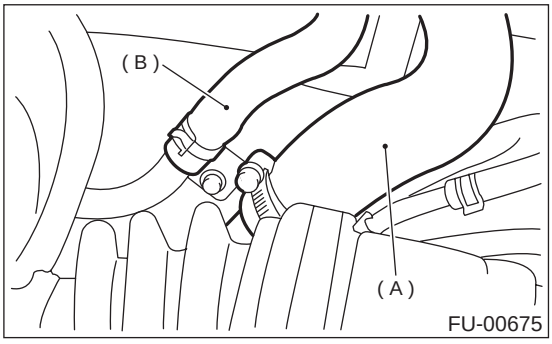

5) Tighten the band mounting bolts.

Tightening torque:
33 N·m (3.4 kgf-m, 25 ft-lb)

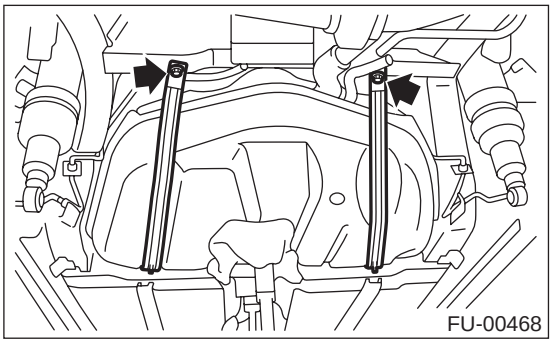

6) Install the rear side protector.

Tightening torque:
18 N·m (1.8 kgf-m, 13.0 ft-lb)

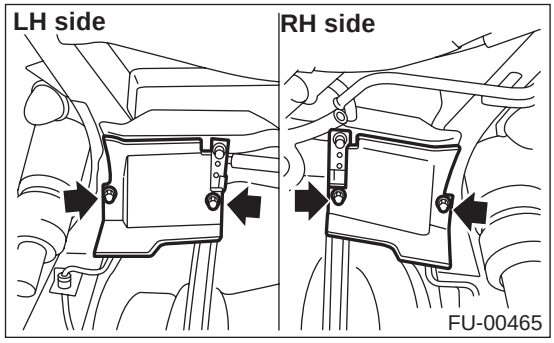

7) Install the rear suspension assembly.

CAUTION:
A helper is required to perform this work.

(1) Support the rear suspension assembly, and then tighten the bolts which secure rear suspension assembly.

Tightening torque:
T1: 172 N·m (17.5 kgf-m, 127 ft-lb)
T2: 108 N·m (11.0 kgf-m, 80 ft-lb)
T3: 66 N·m (6.7 kgf-m, 48 ft-lb)

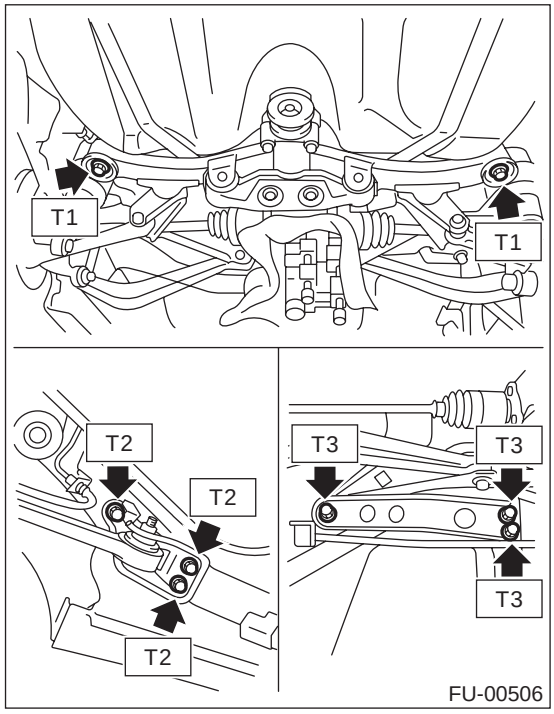

(2) Tighten the bolt which holds rear shock absorber to rear suspension arm. <Ref. to RS-11, INSTALLATION, Rear Arm.>

Tightening torque:
157 N·m (16 kgf-m, 116 ft-lb)

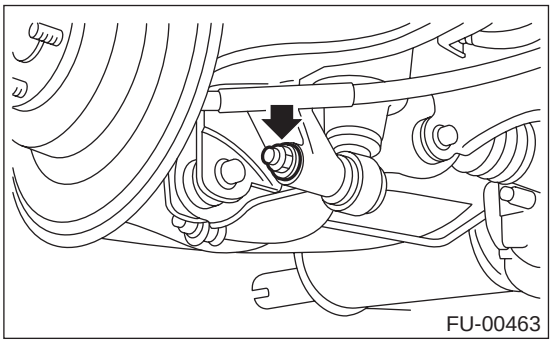
FU-00463

8) Install the rear brake caliper. <Ref. to BR-29, INSTALLATION, Rear Disc Brake Assembly.>
9) Tighten the bolt which holds rear brake hoses holding bracket.

Tightening torque:
33 N·m (3.4 kgf-m, 25 ft-lb)

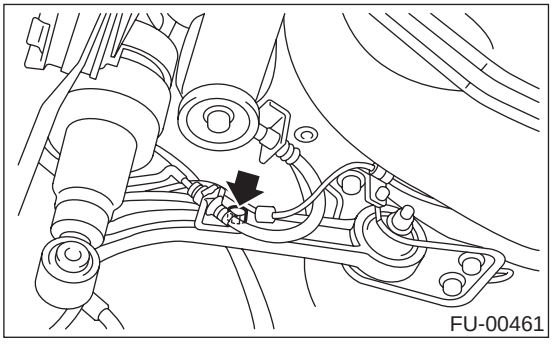
FU-00461

10) Install the parking brake cable to cabin by forcibly pushing it forward.
11) Tighten the bolts which hold parking brake cable holding bracket.

Tightening torque:
18 N·m (1.8 kgf-m, 13.0 ft-lb)

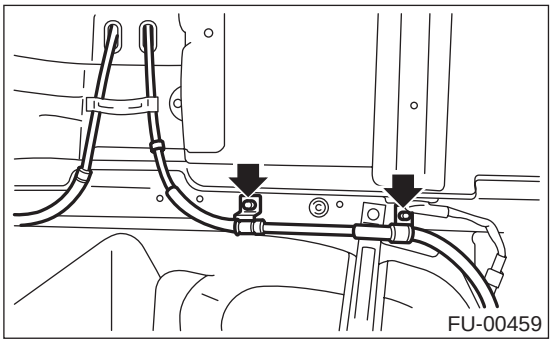
FU-00459

Tightening torque:
32 N·m (3.3 kgf-m, 23.9 ft-lb)

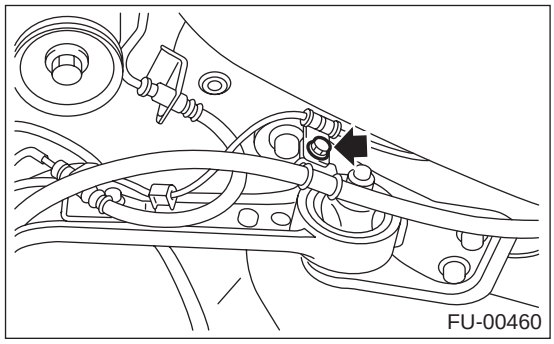
FU-00460

12) Connect the connector to ABS sensor.

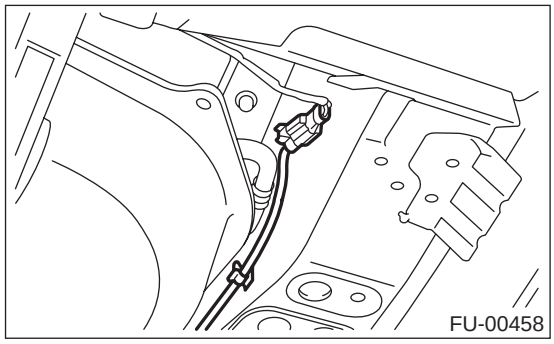
FU-00458

13) Install the propeller shaft. <Ref. to DS-15, INSTALLATION, Propeller Shaft.>
14) Install the rear exhaust pipe and muffler.

NOTE:
To facilitate the procedure, apply a coat of SUBARU CRC to matching area of the rubber cushions in advance.

SUBARU CRC (Part No. 004301003)

(1) Install the right and left rubber cushions.

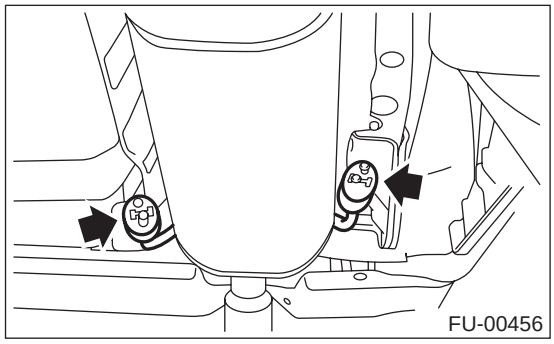
FU-00456

(2) Install the front rubber cushion and attach muffler assembly.

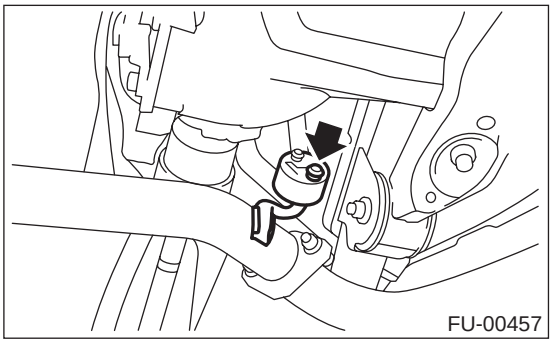

(3) Install the rear exhaust pipe to center exhaust pipe.

Tightening torque:
18 N·m (1.8 kgf-m, 13.0 ft-lb)

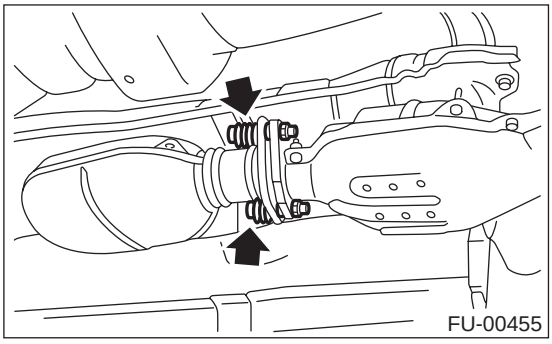

15) Install the front side protector.

Tightening torque:
18 N·m (1.8 kgf-m, 13.0 ft-lb)

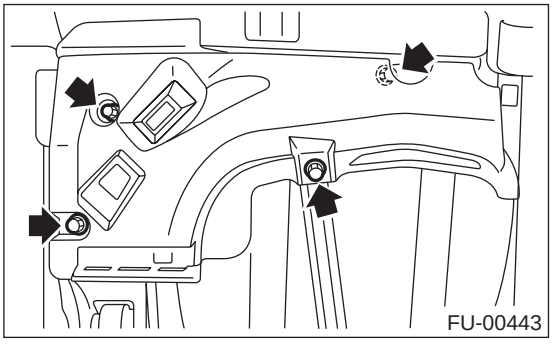

16) Install the rear wheel.
17) Lower the vehicle.
18) Tighten the wheel nuts to rear wheel.
19) Install the parking brake cable. <Ref. to PB-7, INSTALLATION, Parking Brake Cable.>
20) Install the console box. <Ref. to EI-34, INSTALLATION, Console Box.>

21) Connect the fuel hoses, and then hold them with the quick connector. <Ref. to FU(H4SO)-71, INSTALLATION, Fuel Delivery, Return and Evaporation Lines.>

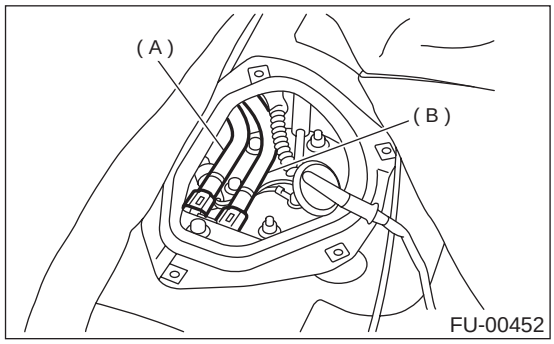

(A) Delivery hose
(B) Return hose

22) Connect the fuel jet pump hose.

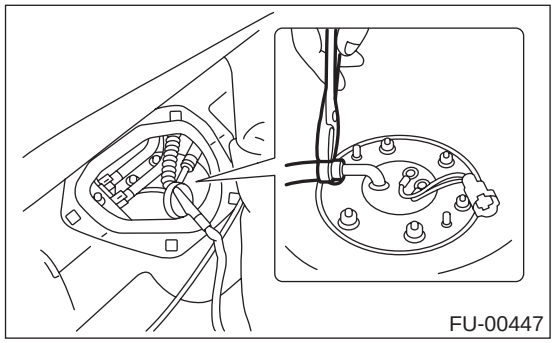

23) Connect the connector to fuel sub level sensor.

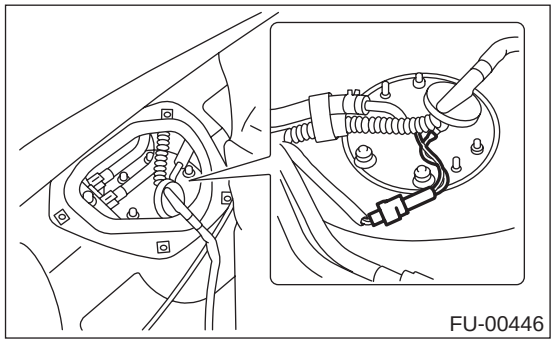

24) Install the sub service hole cover.

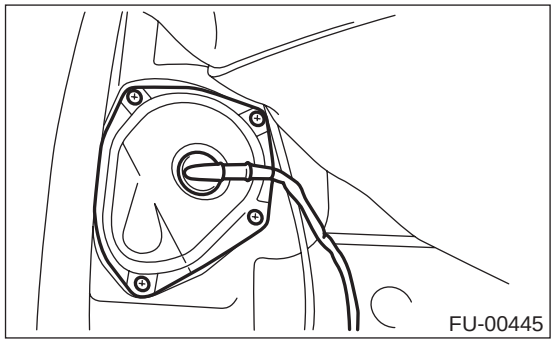

25) Connect the connectors to fuel tank cord, and then plug the service hole with grommet.

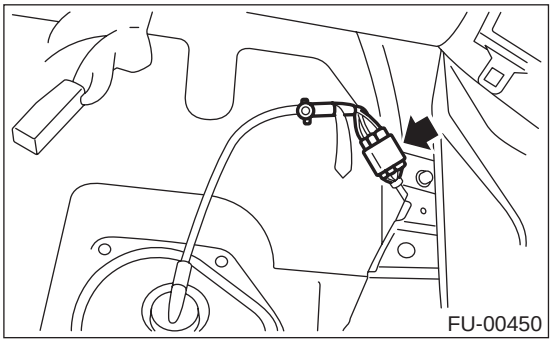

26) Install the holder clip which secures fuel tank cord on bracket.

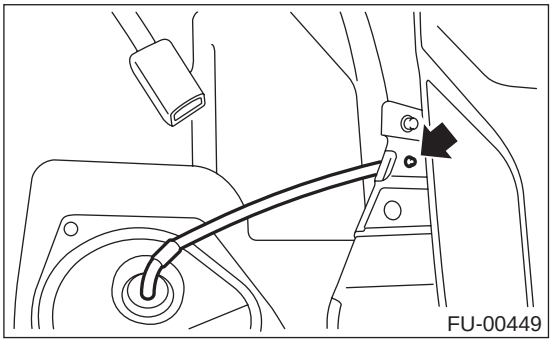

27) Set the rear seat and floor mat.
28) Connect the connector to fuel pump relay (A).

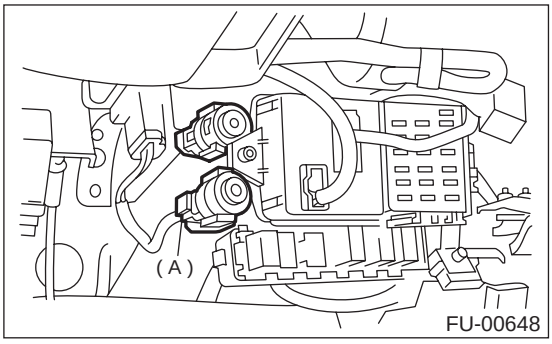

29) Adjust the parking brake lever stroke. <Ref. to PB-6, ADJUSTMENT, Parking Brake Lever.>
30) Check the wheel alignment and adjust if necessary. <Ref. to FS-6, INSPECTION, Wheel Alignment.>

C: INSPECTION

1) Make sure there are no cracks, holes, or other damage on the fuel tank.
2) Make sure that the fuel hoses and fuel pipes are not cracked and that connections are tight.

21.Fuel Filler Pipe

A: REMOVAL

1) Release the fuel pressure. <Ref. to FU(H4SO)-48, RELEASING OF FUEL PRESSURE, OPERATION, Fuel.>
2) Open the fuel filler flap lid, and then remove the filler cap.
3) Disconnect the ground cable from battery.

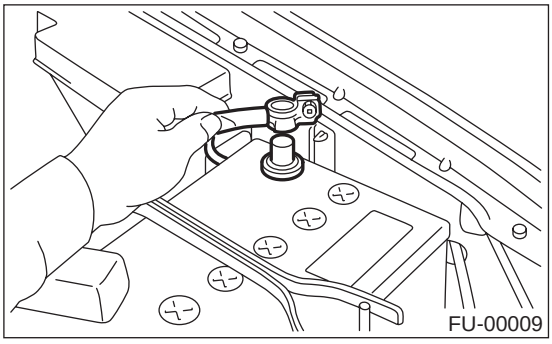

4) Remove the screws holding packing in place.

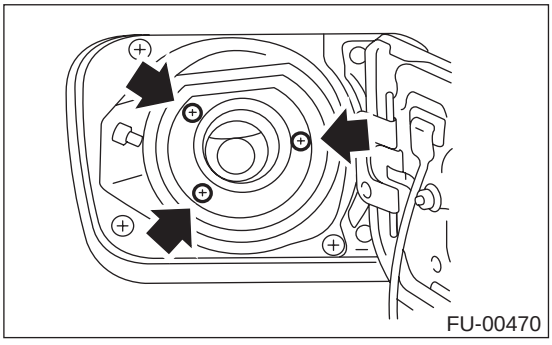

5) Lift-up the vehicle.
6) Remove the rear right side wheel nuts.
7) Remove the wheel RH (Rear).

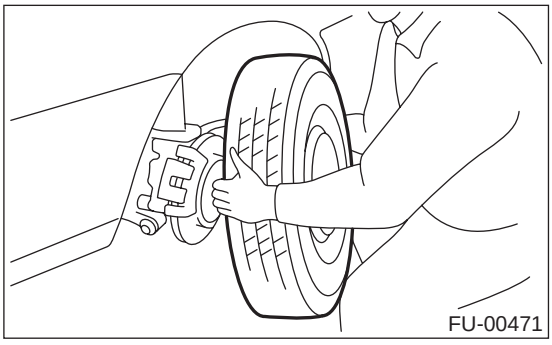

8) Remove the protector RH (Front).

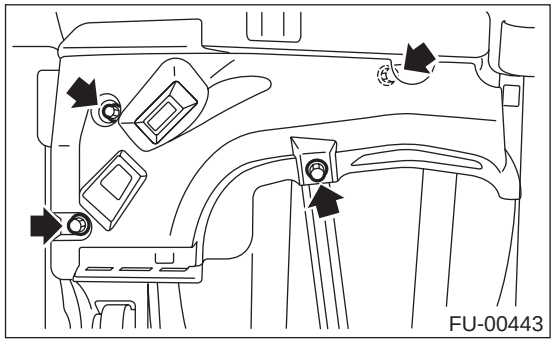

9) Drain fuel from fuel tank. Set a container under the vehicle, and then remove the drain plug from fuel tank.

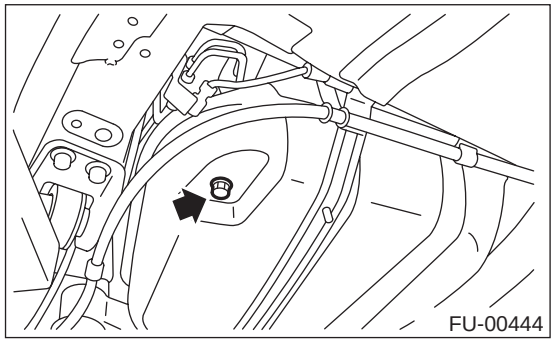

10) Tighten the fuel drain plug, and then install the protector RH (Front).

Tightening torque:
26 N·m (2.65 kg-m, 19.2 ft-lb)

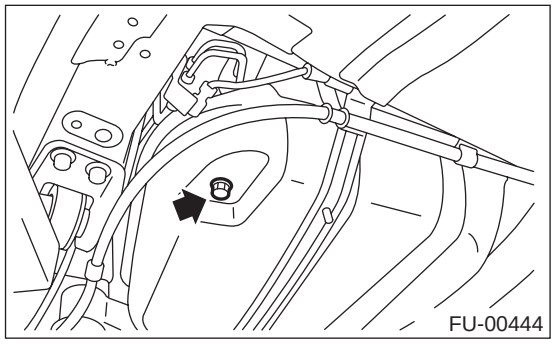

Tightening torque:
18 N·m (1.8 kg-m, 13.0 ft-lb)

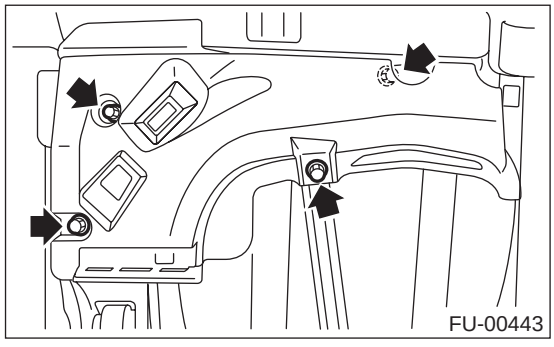

11) Remove the fuel filler pipe protector.

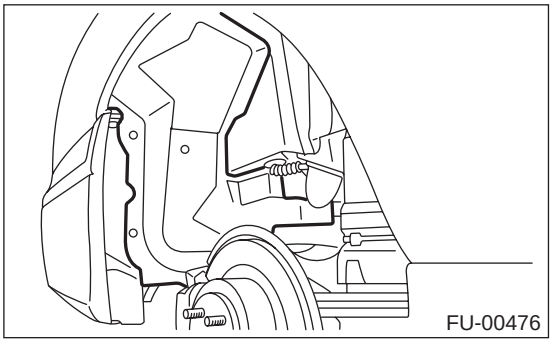

12) Remove the bolts which hold evaporation pipe bracket on fuel filler pipe.

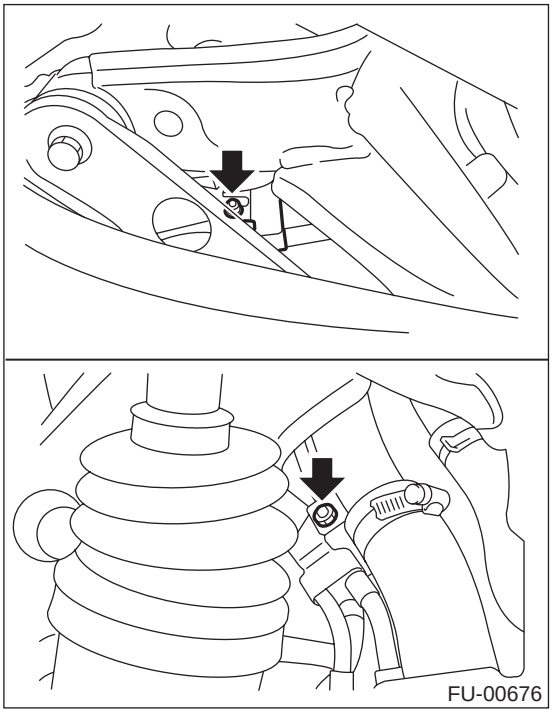

13) Remove the bolts which hold fuel filler pipe bracket on body.

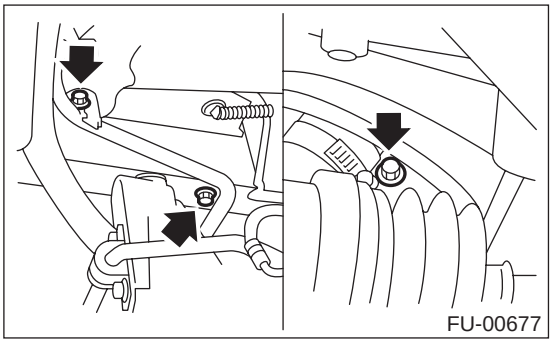

14) Loosen the clamp, and then separate the fuel filler hose (A) from fuel filler pipe.

15) Move the clip, and then separate the air vent hose (B).

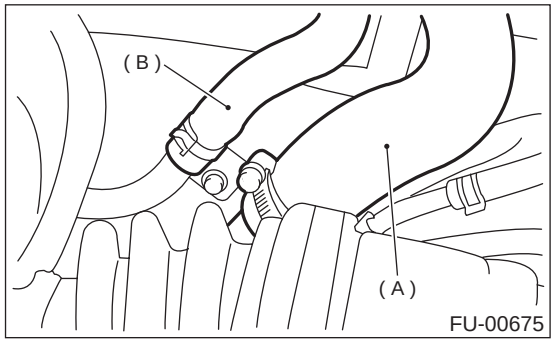

16) Remove the fuel filler pipe to under side of the vehicle.

B: INSTALLATION

1) Hold the fuel filler flap open.
2) Set the fuel saucer (A) with rubber packing (C), and then insert the fuel filler pipe into hole from the inner side of apron.

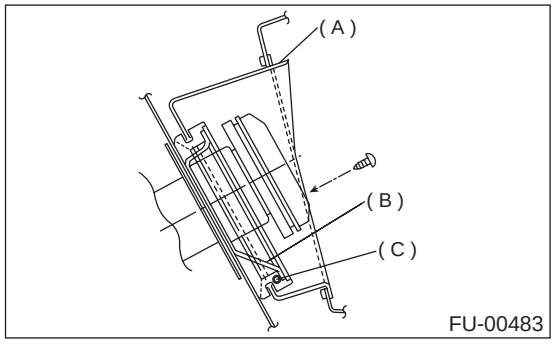

3) Align holes in the fuel filler pipe neck, and then set the cup (B), and tighten screws.

NOTE:
If the edges of rubber packing are folded toward inside, straighten it with a screwdriver.

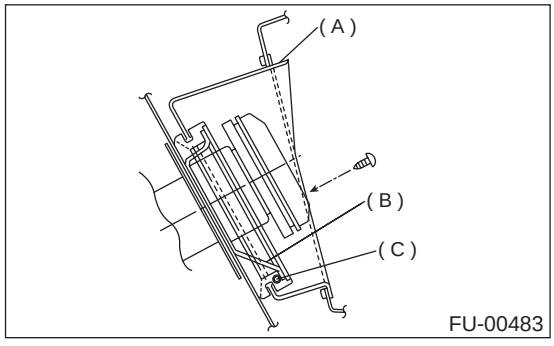

4) Insert the fuel filler hose (A) approx. 35 to 40 mm (1.38 to 1.57 in) over the lower end of fuel filler pipe, and then tighten clamp.

NOTE:
Do not allow clips to touch air vent hose (B) and rear suspension crossmember.

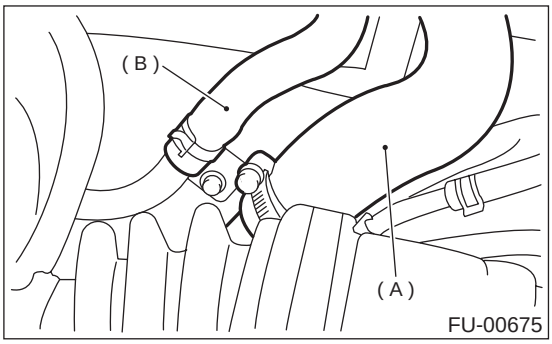

5) Insert the air vent hose approx. 25 to 30 mm (0.98 to 1.18 in) into the lower end of air vent pipe and hold clip.

L = 27.5±2.5 mm (1.083±0.098 in)

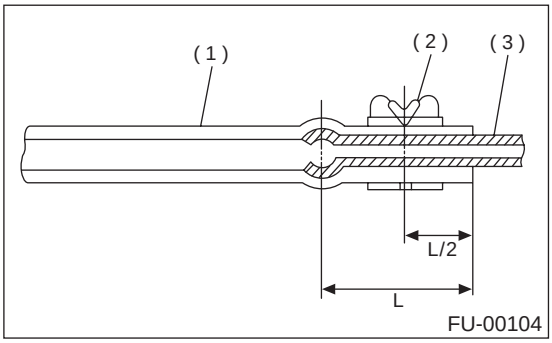

(1) Hose
(2) Clip
(3) Pipe

6) Tighten the bolt which holds fuel filler pipe bracket on body.

Tightening torque:
7.4 N·m (0.75 kg-m, 5.4 ft-lb)

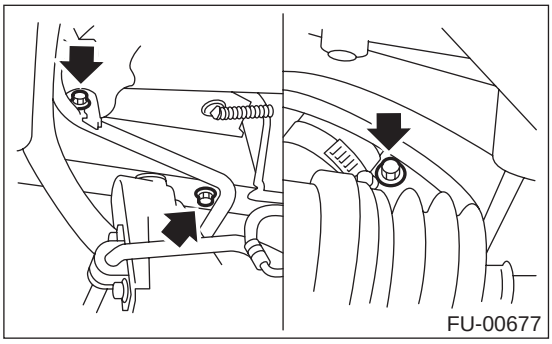

7) Tighten the bolts which hold evaporation pipe bracket on fuel pipe.

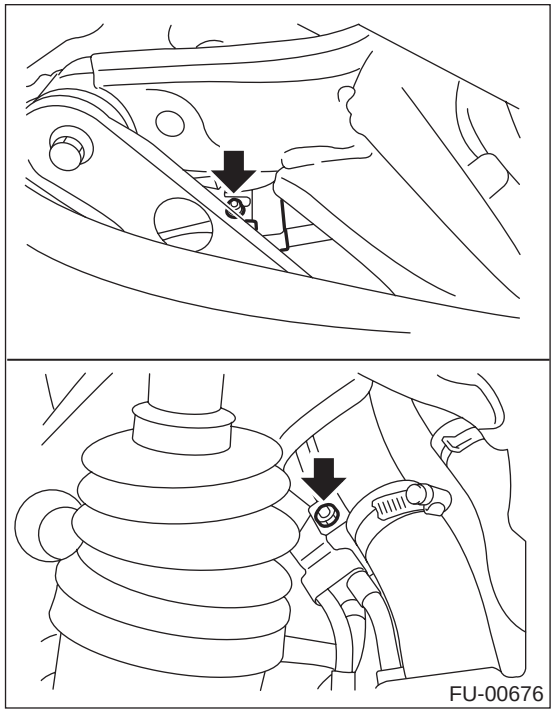

8) Install the fuel filler pipe protector.

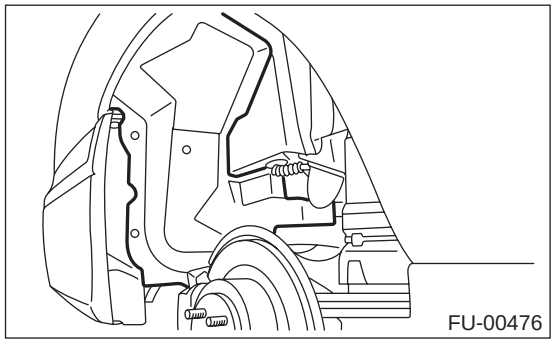

9) Install the rear right wheel.

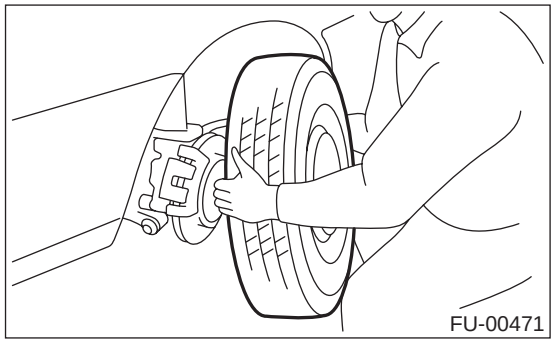

10) Lower the vehicle.
11) Tighten the wheel nuts.

12) Connect the connector to fuel pump relay (A).

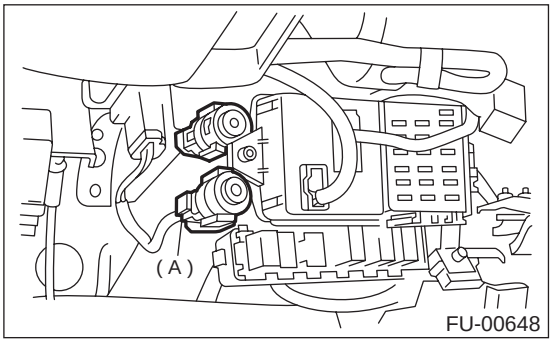

13) Connect the battery ground cable to battery.

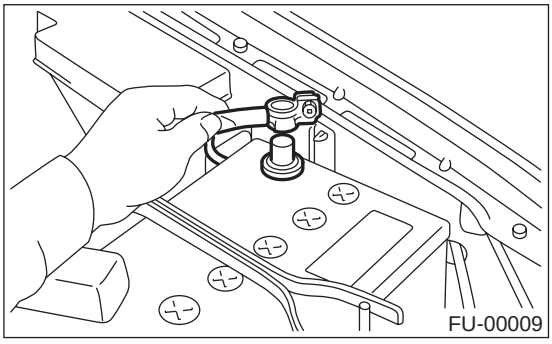

22.Fuel Pump

A: REMOVAL

WARNING:
- **Place “NO FIRE” signs near the working area.**
- **Be careful not to spill fuel on the floor.**

NOTE:
The fuel pump assembly consists of fuel pump and fuel level sensor.

1) Release the fuel pressure. <Ref. to FU(H4SO)-48, RELEASING OF FUEL PRESSURE, OPERATION, Fuel.>
2) Open the fuel filler flap lid, and then remove the fuel filler cap.
3) Disconnect the ground cable from battery.

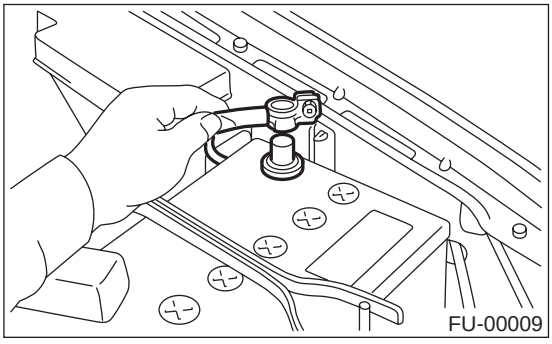

4) Lift-up the vehicle.
5) Remove the protector RH (Front).

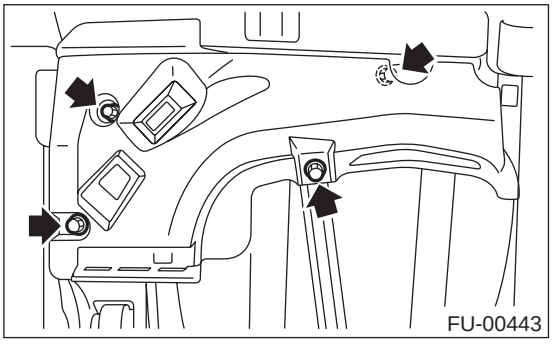

6) Drain the fuel from fuel tank. Set a container under the vehicle, and then remove the drain plug from fuel tank.

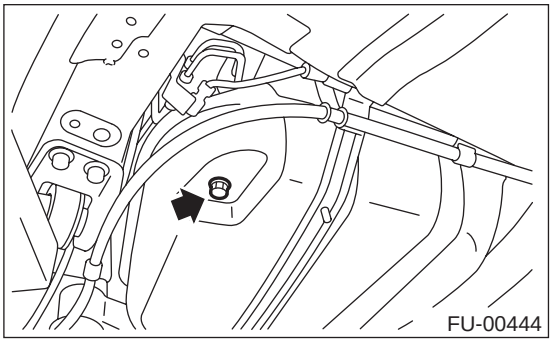

7) Tighten the fuel drain plug, and then install the protector RH (Front).

Tightening torque:
26 N·m (2.65 kgf-m, 19.2 ft-lb)

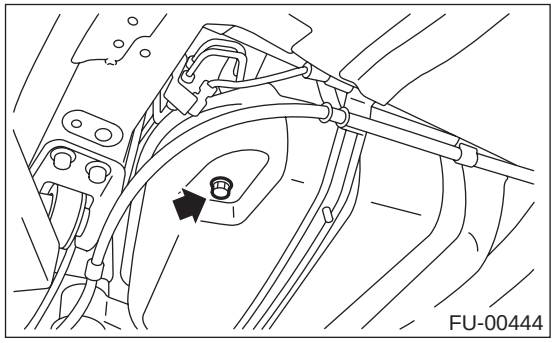

Tightening torque:
18 N·m (1.8 kgf-m, 13.0 ft-lb)

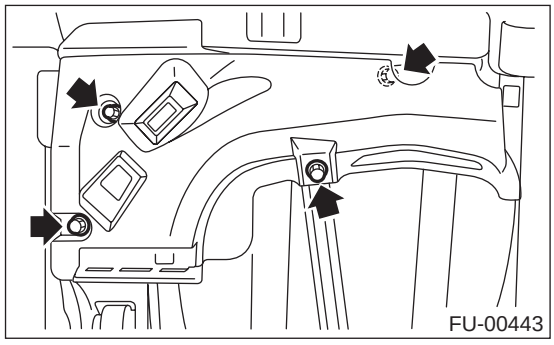

8) Raise the rear seat, and then turn the floor mat up.
9) Remove the access hole lid.

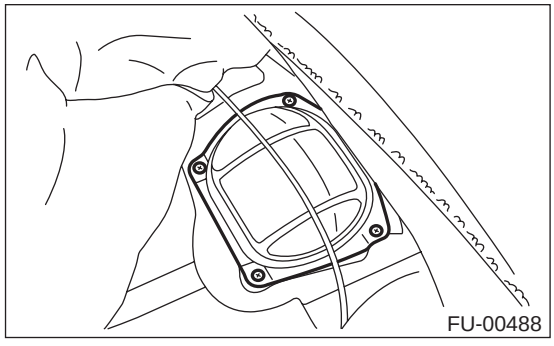

10) Disconnect the connector from fuel pump.

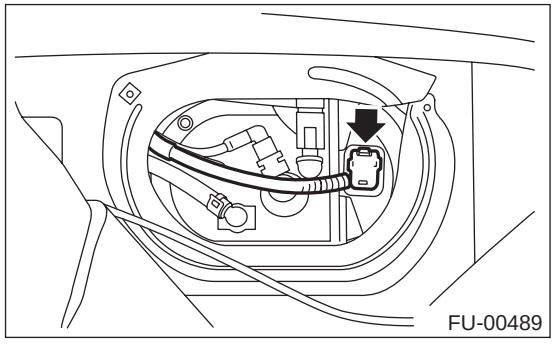

11) Move the clips, and then disconnect the jet pump hose (C).
12) Disconnect the quick connector, and then disconnect the fuel delivery hose (A) and return hose (B). <Ref. to FU(H4SO)-70, REMOVAL, Fuel Delivery, Return and Evaporation Lines.>

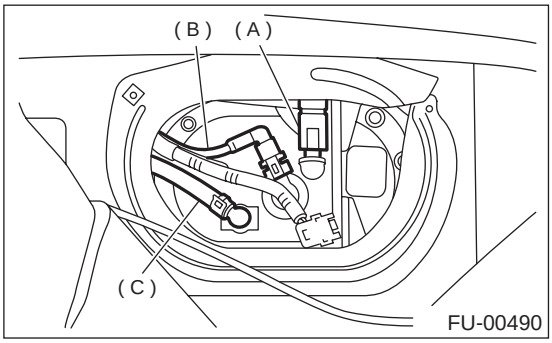

13) Remove the nuts which install fuel pump assembly onto fuel tank.

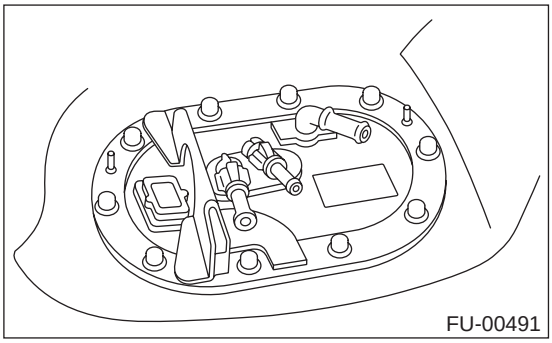

14) Take off the fuel pump assembly from fuel tank.

B: INSTALLATION

Install in the reverse order of removal. Do the following:
(1) Always use new gaskets.
(2) Ensure the sealing portion is free from fuel or foreign particles before installation.
(3) Tighten the nuts in alphabetical sequence shown in the figure to specified torque.

Tightening torque:
5.9 N·m (0.6 kgf-m, 4.3 ft-lb)

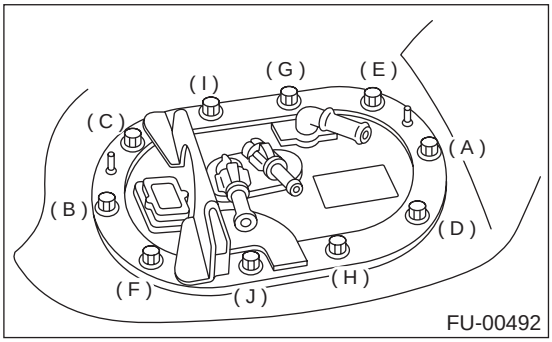

C: DISASSEMBLY

1) Remove the fuel pump and pump holder.

NOTE:
When disassembling the pump holder, be careful as it is installed with two pawls.

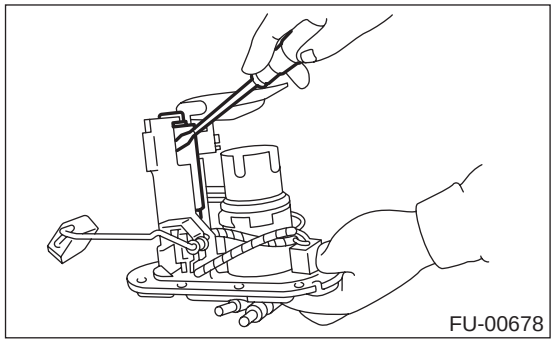

2) Disconnect the connector from fuel pump.

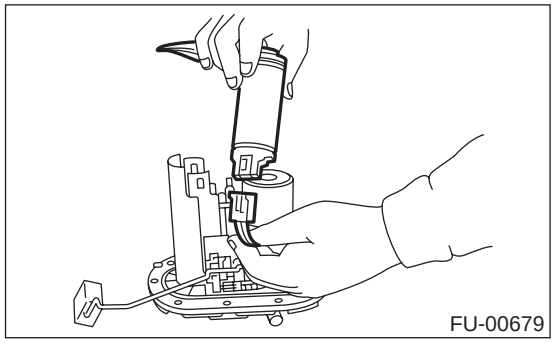

D: ASSEMBLY

Assemble in the reverse order of disassembly.

E: INSPECTION

Connect the lead harness to connector terminal of fuel pump, and then apply battery power supply to check whether the pump operate.

WARNING:
- **Wipe off the fuel completely.**
- **Keep the battery as far apart from fuel pump as possible.**
- **Be sure to turn the battery supply ON and OFF on the battery side.**
- **Do not run the fuel pump for a long time under non-load condition.**

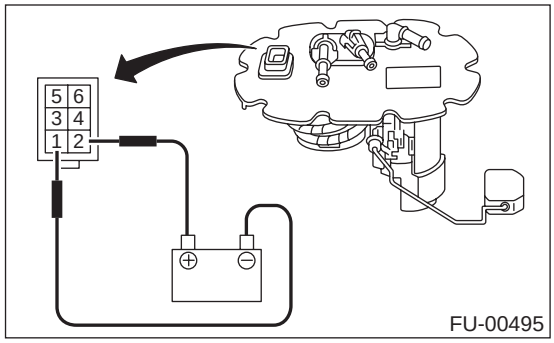

23.Fuel Level Sensor

A: REMOVAL

WARNING:
- **Place “NO FIRE” signs near the working area.**
- **Be careful not to spill fuel on the floor.**

NOTE:
The fuel level sensor is built in fuel pump assembly.

1) Remove the fuel pump assembly. <Ref. to FU(H4SO)-62, REMOVAL, Fuel Pump.>

2) Disconnect the connector from fuel pump bracket.

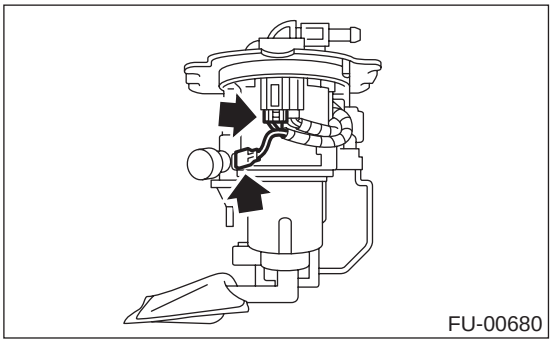

3) Pushing the pawls with a screwdriver, remove the fuel meter unit by pulling it downwards.

NOTE:
Replace the fuel filter pawls with new ones as they might brake when removed.

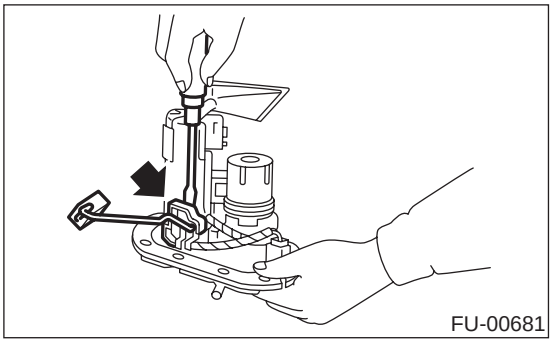

B: INSTALLATION

Install in the reverse order of removal.

WARNING:
- **Ground cable must be connnected.**
- **Spark may occur and ignite if fuel is nearby.**

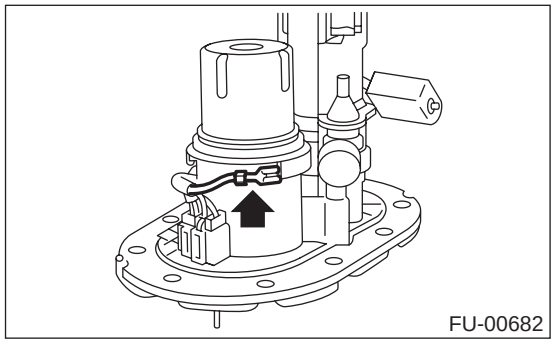

24.Fuel Sub Level Sensor

A: REMOVAL

WARNING:
- **Place “NO FIRE” signs near the working area.**
- **Be careful not to spill fuel on the floor.**

1) Disconnect the ground cable from battery.

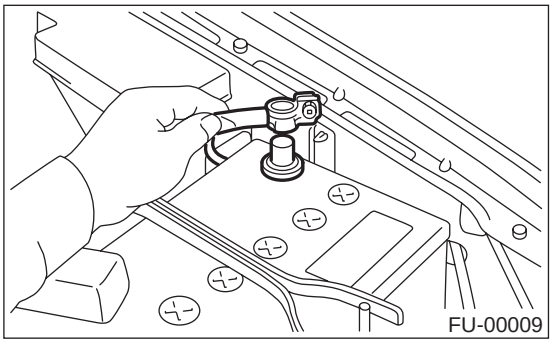

2) Lift-up the vehicle.
3) Remove the front side fuel tank cover.

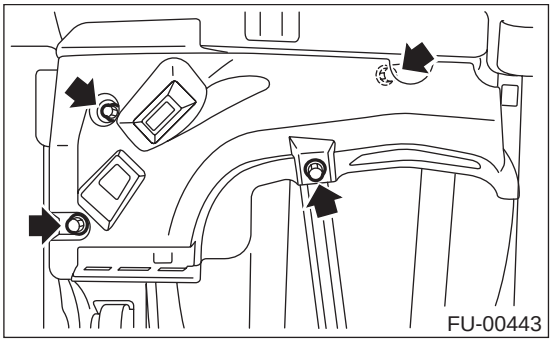

4) Drain fuel from fuel tank. Set a container under the vehicle, and then remove the drain plug from fuel tank.

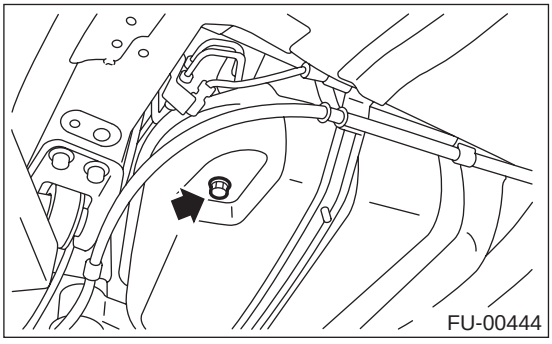

5) Tighten the fuel drain plug and install the protector RH (Front).

Tightening torque:
26 N·m (2.65 kgf-m, 19.2 ft-lb)

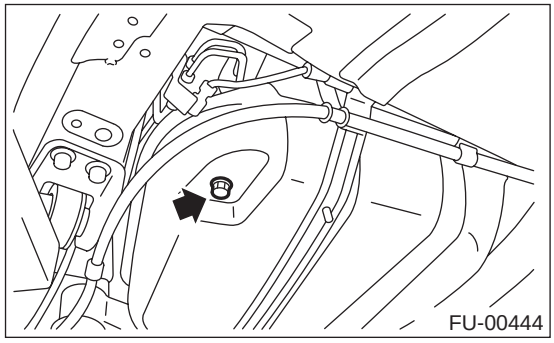

Tightening torque:
18 N·m (1.8 kgf-m, 13.0 ft-lb)

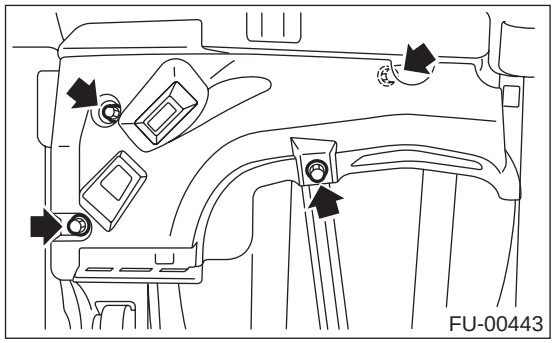

6) Remove the rear seat.
7) Remove the service hole cover.

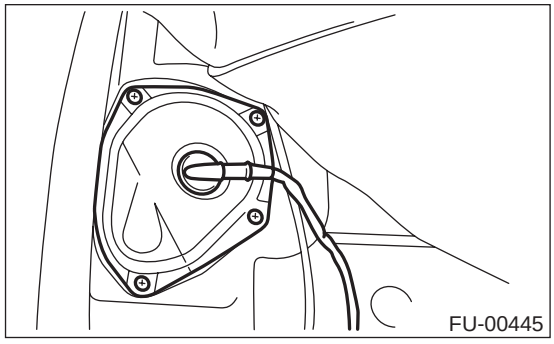

8) Disconnect the connector from fuel sub level sensor.

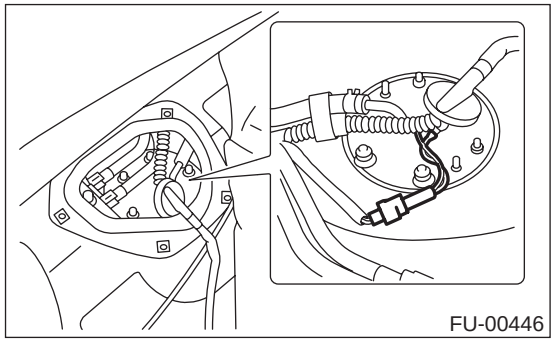

9) Disconnect the fuel jet pump hose.

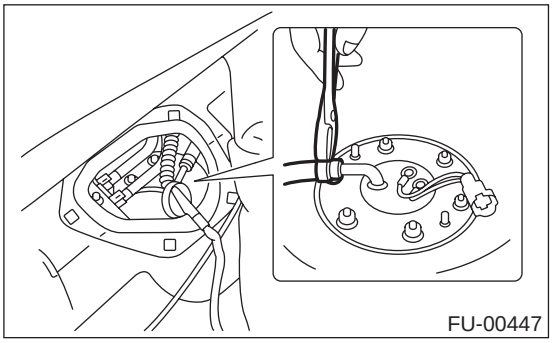

10) Remove the bolts which install fuel sub level sensor on fuel tank.

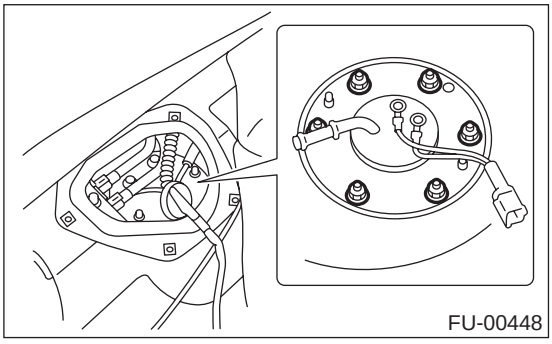

11) Remove the fuel sub level sensor.

B: INSTALLATION

Install in the reverse order of removal.

Tightening torque:
4.4 N·m (0.45 kgf-m, 3.3 ft-lb)

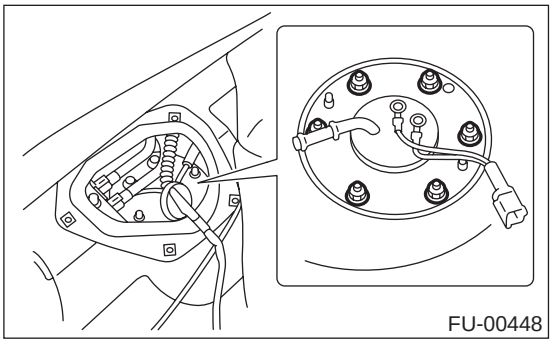

25.Fuel Filter

A: REMOVAL

WARNING:
- **Place “NO FIRE” signs near the working area.**
- **Be careful not to spill fuel on the floor.**

NOTE:
The fuel filter is built in fuel pump assembly.

1) Release the fuel pressure. <Ref. to FU(H4SO)-48, RELEASING OF FUEL PRESSURE, OPERATION, Fuel.>
2) Remove the fuel pump assembly. <Ref. to FU(H4SO)-62, REMOVAL, Fuel Pump.>
3) Disconnect the ground cable from filter holder.

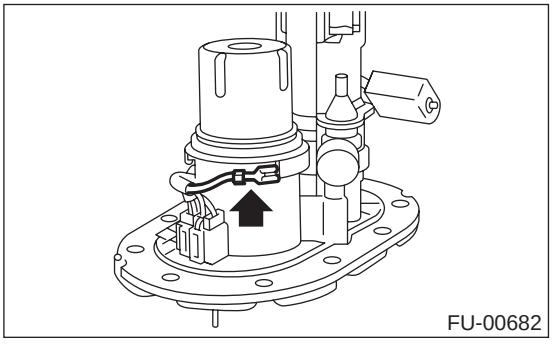

4) Remove the filter holder by turning it to the left from the body pawls, and then take out the filter.

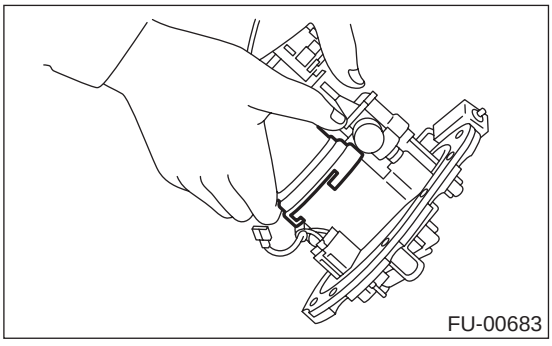

B: INSTALLATION

NOTE:
- If the fuel hoses are damaged at the connecting portion, replace it with a new one.
- If the clamps are badly damaged, replace with new ones.
- Replace the o-ring with new ones.

1) Set the O-ring on the filter holder, and then install by turning to the right.

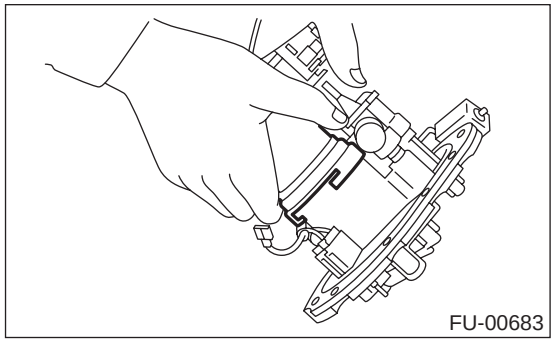

2) Install the fuel pump assembly. <Ref. to FU(H4SO)-63, INSTALLATION, Fuel Pump.>

C: INSPECTION

1) Check the inside of fuel filter for dirt and water sediment.
2) If it is clogged, or if replacement interval has been reached, replace it.

26.Fuel Cut Valve

A: REMOVAL

1) Remove the fuel tank. <Ref. to FU(H4SO)-51, REMOVAL, Fuel Tank.>
2) Move the clip, and then disconnect the evaporation hose from fuel cut valve.

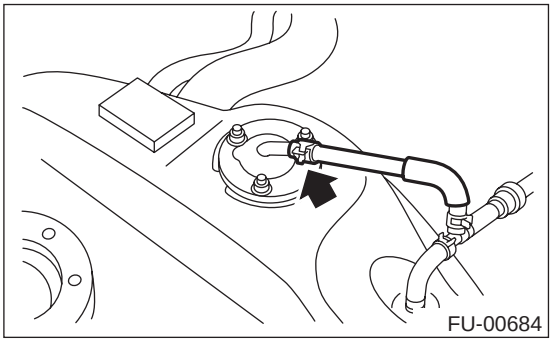

3) Remove the bolts which install fuel cut valve.

B: INSTALLATION

Install in the reverse order of removal.

Tightening torque:
4.4 N·m (0.45 kgf-m, 3.3 ft-lb)

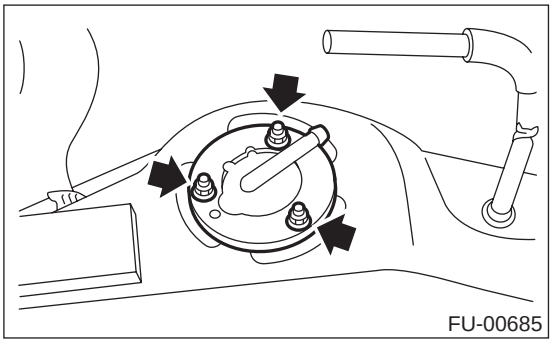

27.Fuel Damper Valve

A: REMOVAL

1) Release the fuel pressure. <Ref. to FU(H4SO)-48, RELEASING OF FUEL PRESSURE, OPERATION, Fuel.>
2) Remove the fuel damper valve from fuel delivery line (A) and return line (B).

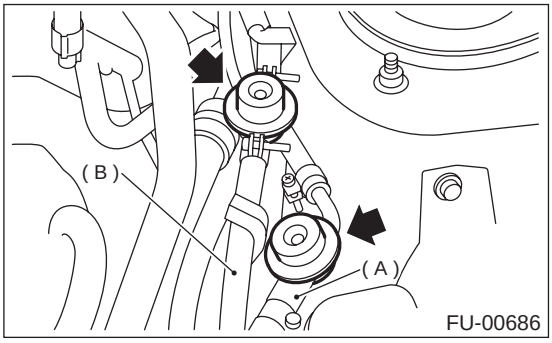

B: INSTALLATION

Install in the reverse order of removal.

28. Fuel Delivery, Return and Evaporation Lines

A: REMOVAL

1) Set the vehicle on the lift.
2) Release the fuel pressure. <Ref. to FU(H4SO)-48, RELEASING OF FUEL PRESSURE, OPERATION, Fuel.>
3) Open the fuel filler flap lid, and then remove the fuel filler cap.
4) Remove the floor mat. <Ref. to EI-48, REMOVAL, Floor Mat.>
5) Remove the fuel delivery pipes and hoses, fuel return pipes and hoses, evaporation pipes and hoses.

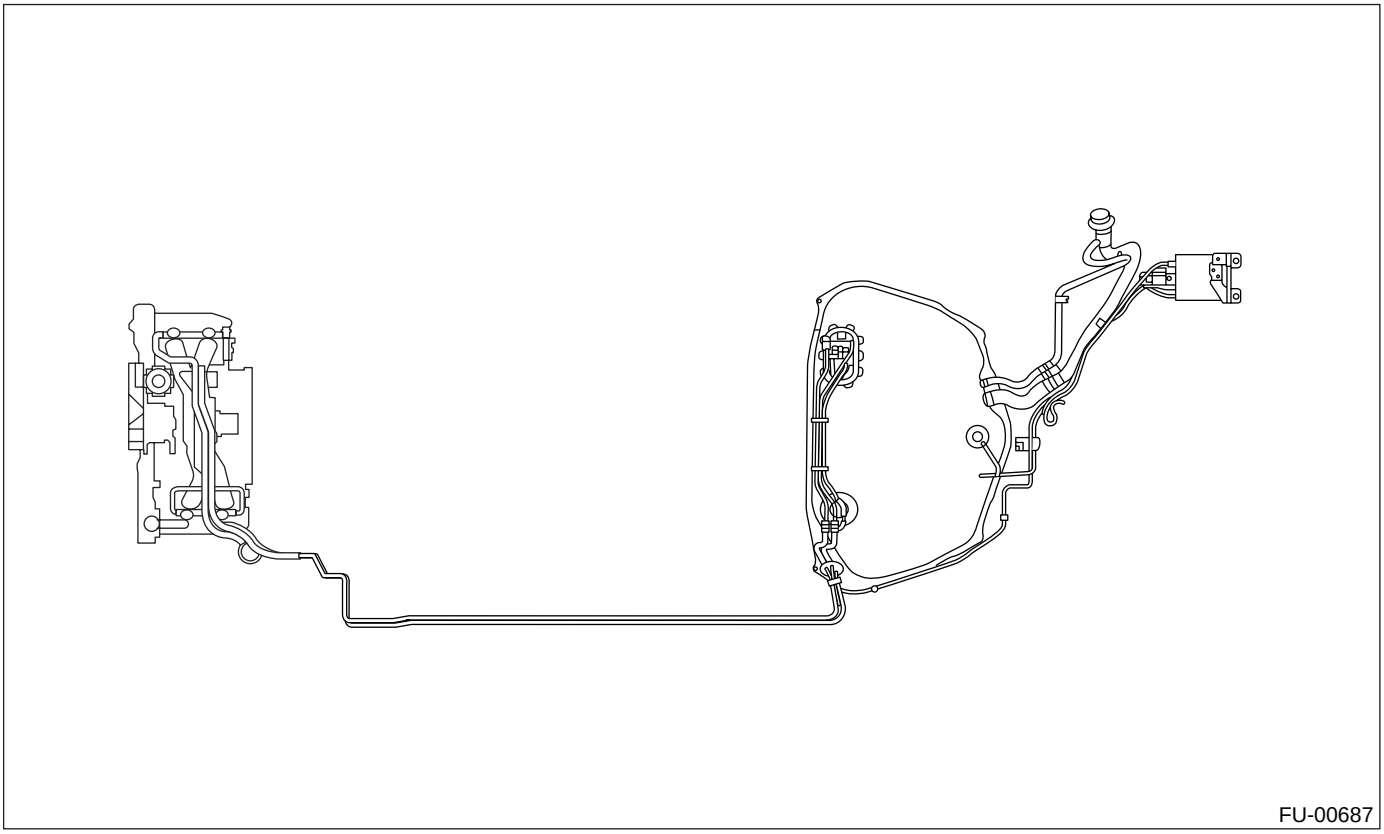

6) In engine compartment, detach the fuel delivery hoses, return hoses and evaporation hose.

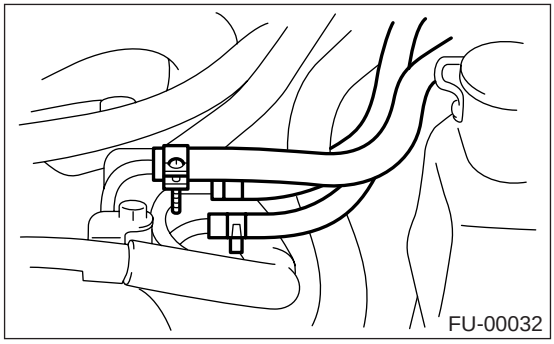

7) Lift-up the vehicle.

8) Disconnect the two-way valve hose (A) from the two-way valve and disconnect evaporation hose (B) from evaporation pipe.

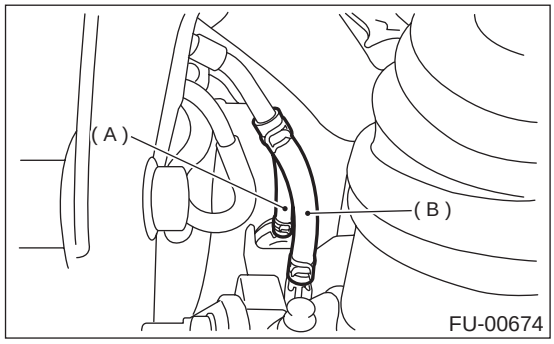

9) Separate the quick connector on fuel delivery and return line.
   (1) Clean the pipe and connector, if they are covered with dust.
   (2) Hold the connector (A) and push retainer (B) down.
   (3) Pull out the connector (A) from retainer (B).

NOTE:
Replace the retainer with new ones.

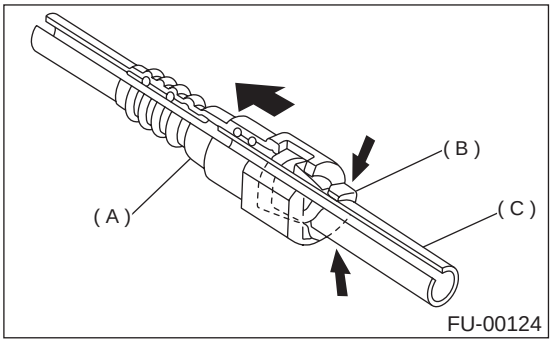

(A) Connector
(B) Retainer
(C) Pipe

B: INSTALLATION

1) Connect the quick connector on fuel delivery and return lines.

NOTE:
- Always use a new retainer.
- Make sure that the connected portion is not damaged or has dust. If necessary, clean the seal surface of pipe.

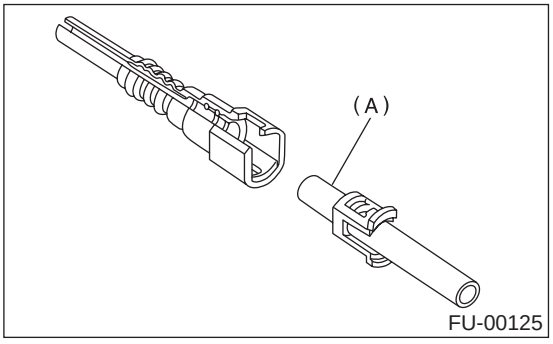

(A) Seal surface

(1) Set a new retainer (B) to connector (A).
(2) Push the pipe into connector completely.

NOTE:
At this time, two clicking sounds are heard.

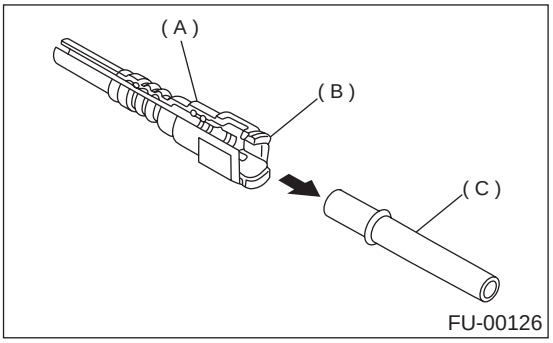

(A) Connector
(B) Retainer
(C) Pipe

NOTE:
- Pull the connector to ensure it is connected securely.
- Ensure the two retainer pawls are engaged in their mating positions in the connrcotr.
- Be sure to inspect the hoses and their conections leakage of fuel.

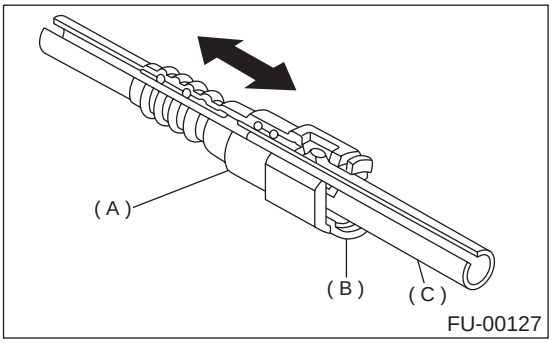

(A) Connector
(B) Retainer
(C) Pipe

2) Connect the fuel delivery hose to pipe with an overlap of 20 to 25 mm (0.79 to 0.98 in).
Type A: When fitting length is specified.
Type B: When fitting length is not specified.

ℓ : 2.5±1.5 mm (0.098±0.059 in)

L: 22.5±2.5 mm (0.886±0.098 in)

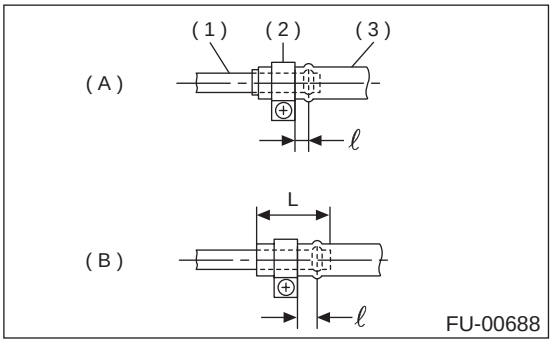

(1) Fitting
(2) Clamp
(3) Hose
(A) Type A
(B) Type B

3) Connect the evaporation hose to pipe by approx. 15 mm (0.59 in) from hose end.

L = 17.5±2.5 mm (0.689±0.098 in)

NOTE:
Be sure to inspect the hoses and their connections for any leakage of huel.

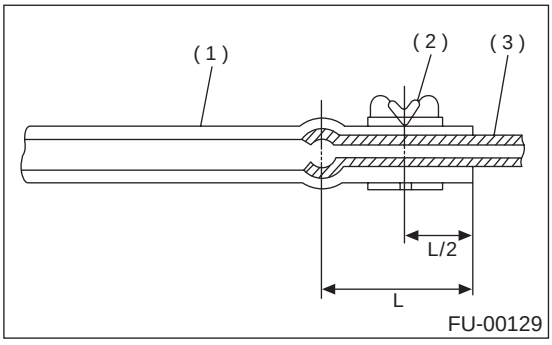

(1) Hose
(2) Clip
(3) Pipe

C: INSPECTION

1) Make sure that there are no cracks on the fuel pipes and fuel hoses.
2) Make sure that the fuel pipe and fuel hose connections are tight.

29.Fuel System Trouble in General

A: INSPECTION

Trouble and possible cause		Corrective action
1. Insufficient fuel supply to the injector		
1)	Fuel pump will not operate.	
	❍ Defective terminal contact.	Inspect connections, especially ground, and tighten securely.
	❍ Trouble in electromagnetic or electronic circuit parts.	Replace the fuel pump.
2)	Lowering of fuel pump function.	Replace the fuel pump.
3)	Clogged dust or water in the fuel filter.	Replace the fuel filter, clean or replace the fuel tank.
4)	Clogged or bent fuel pipe or hose.	Clean, correct or replace the fuel pipe or hose.
5)	Air is mixed in the fuel system.	Inspect or retighten each connection part.
6)	Clogged or bent breather tube or pipe.	Clean, correct or replace the air breather tube or pipe.
7)	Damaged diaphragm of pressure regulator.	Replace.
2. Leakage or blow out fuel		
1)	Loosened joints of the fuel pipe.	Retightening.
2)	Cracked fuel pipe, hose and fuel tank.	Replace.
3)	Defective welding part on the fuel tank.	Replace.
4)	Defective drain packing of the fuel tank.	Replace.
5)	Clogged or bent air breather tube or air vent tube.	Clean, correct or replace the air breather tube or air vent tube.
3. Gasoline smell inside of compartment		
1)	Loose joints at air breather tube, air vent tube and fuel filler pipe.	Retightening.
2)	Defective packing air tightness on the fuel saucer.	Correct or replace packing.
3)	Cracked fuel separator.	Replace the separator.
4)	Inoperative fuel pump modulator or circuit.	Replace.
4. Defective fuel meter indicator		
1)	Defective operation of fuel meter unit.	Replace.
2)	Defective operation of fuel meter.	Replace.
5. Noise		
1)	Large operation noise or vibration of fuel pump.	Replace.

NOTE:
- When the vehicle is left unattended for an extended period of time, water may accumulate in the fuel tank. To prevent water condensation.
  (1) Top off the fuel tank or drain the fuel completely.
  (2) Drain water condensation from the fuel filter.
- Refilling the fuel tank.

Refill the fuel tank while there is still some fuel left in the tank.
- Protecting the fuel system against freezing and water condensation.
  (1) Cold areas
  In snow-covered areas, mountainous areas, skiing areas, etc. where ambient temperatures drop below 0°C (32°F) throughout the winter season, use an anti-freeze solution in the cooling system. Refueling will also complement the effect of anti-freeze solution each time the fuel level drops to about one-half. After the winter season, drain water which may have accumulated in the fuel filter and fuel tank in the manner same as that described under Affected areas below.
  (2) Affected areas
  When water condensation is notched in the fuel filter, drain water from both the fuel filter and fuel tank or use a water removing agent (or anti-freeze solution) in the fuel tank.
- Observe the instructions, notes, etc., indicated on the label affixed to the anti-freeze solution (water removing agent) container before use.

MEMO: