CHASSIS SECTION

FRONT SUSPENSION	FS
REAR SUSPENSION	RS
WHEEL AND TIRE SYSTEM	WT
DIFFERENTIALS	DI
TRANSFER CASE	TC
DRIVE SHAFT SYSTEM	DS
ABS	ABS
ABS (DIAGNOSTICS)	ABS
VDC	VDC
VDC (DIAGNOSTICS)	VDC
BRAKE	BR
PARKING BRAKE	PB
POWER ASSISTED SYSTEM (POWER STEERING)	PS

This service manual has been prepared to provide SUBARU service personnel with the necessary information and data for the correct maintenance and repair of SUBARU vehicles.
This manual includes the procedures for maintenance, disassembling, reassembling, inspection and adjustment of components and diagnostics for guidance of experienced mechanics.
Please peruse and utilize this manual fully to ensure complete repair work for satisfying our customers by keeping their vehicle in optimum condition. When replacement of parts during repair work is needed, be sure to use SUBARU genuine parts.

FUJI HEAVY INDUSTRIES LTD.

G2300GE6

WHEEL AND TIRE SYSTEM

WT

Page

1. General Description 2
2. Tire 4
3. Steel Wheel 5
4. Aluminum Wheel 6
5. Wheel Balancing 7
6. “T-type” Tire 8
7. Full Wheel Cap 9
8. General Diagnostic Table 10

1. General Description

A: SPECIFICATIONS

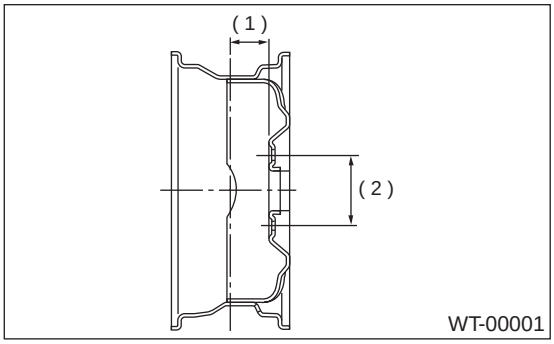

(1) Offset
(2) P.C.D.

		Tire size	Rim size	Rim offset	P.C.D.
2.0 L model	Front and Rear	195/60R15 88V	15 × 6JJ	55 mm (2.17 in)	100 mm (3.94 in) dia.
2.5 L model	Front and Rear	205/50R16 87V	16 × 6 1/2JJ	55 mm (2.17 in)	
		195/60R15 88V	15 × 6JJ	55 mm (2.17 in)	
OUTBACK model	Front and Rear	215/60R16 95H*1 215/60R16 95V	16 × 6 1/2JJ	48 mm (1.89 in)	
Turbo model	Front and Rear	215/45ZR17 87W	17 × 7JJ	55 mm (2.17 in)	
	T-type tire	T135/70 D16	16 × 4T	50 mm (1.97 in)	

		Tire size	Tire inflation pressure kPa (kg/cm^2, psi)		
			Light load	Full load	Trailler towing
2.0 L model	Front and Rear	195/60R15 88V	Ft: 220 (2.2, 32) Rr: 210 (2.1, 30)	Ft: 220 (2.2, 32) Rr: 250 (2.5, 36)	Ft: 220 (2.2, 32) Rr: 270 (2.7, 39)
2.5 L model	Front and Rear	205/50R16 87V 195/60R15 88V*2	Ft: 230 (2.3, 33), 220 (2.2, 32)*2 Rr: 220 (2.2, 32), 210 (2.1, 30)*2	Ft: 230 (2.3, 33), 220 (2.2, 32)*2 Rr: 250 (2.5, 36)	Ft: 230 (2.3, 33), 220 (2.2, 32)*2 Rr: 270 (2.7, 39)
OUTBACK model	Front and Rear	215/60R16 95H*1 215/60R16 95V	Ft: 200 (2.0, 29) Rr: 190 (1.9, 28), 200 (2.0, 29)*1	Ft: 200 (2.0, 29) Rr: 250 (2.5, 36)	Ft: 200 (2.0, 29) Rr: 250 (2.5, 36)
Turbo model	Front and Rear	215/45R ZR17	Ft: 230 (2.3, 33) Rr: 220 (2.2, 32)	Ft: 230 (2.3, 33) Rr: 250 (2.5, 36)	Ft: 230 (2.3, 33) Rr: 270 (2.7, 39)
	T-type tire	T135/70 D16	420 (4.2, 60)		—

*1: Australia spec. vehicles
*2: General spec. vehicles

1. SERVICE DATA

Item	Axial runout	Radial runout
Steel wheel	1.5 mm (0.059 in)	
Aluminum wheel	1.0 mm (0.039 in)	

2. ADJUSTING PARTS

Wheel balancing	Standard	Service limit
Dynamic unbalance	Less than 5 g (0.18 oz)	

Balance weight part number (For steel wheel)	Weight
28101AA001	5 g (0.18 oz)
28101AA011	10 g (0.35 oz)
28101AA021	15 g (0.53 oz)
28101AA031	20 g (0.71 oz)
28101AA041	25 g (0.88 oz)
28101AA051	30 g (1.06 oz)
28101AA061	35 g (1.23 oz)
28101AA071	40 g (1.41 oz)
28101AA081	45 g (1.59 oz)
28101AA091	50 g (1.76 oz)
—	55 g (1.94 oz)
28101AA111	60 g (2.12 oz)

Balance weight part number (For aluminum wheel)	Weight
23141GA462	5 g (0.18 oz)
23141GA472	10 g (0.35 oz)
23141GA482	15 g (0.53 oz)
23141GA492	20 g (0.71 oz)
23141GA502	25 g (0.88 oz)
23141GA512	30 g (1.06 oz)
23141GA522	35 g (1.23 oz)
23141GA532	40 g (1.41 oz)
23141GA542	45 g (1.59 oz)
23141GA552	50 g (1.76 oz)
—	55 g (1.94 oz)
23141GA572	60 g (2.12 oz)

B: PREPARATION TOOL

1. GENERAL PURPOSE TOOLS

TOOL NAME	REMARKS
Air Pressure Gauge	Used for measuring tire air pressure.
Dial Gauge	Used for measuring wheel runout.

2. Tire

A: INSPECTION

1) Take stone, glass, nail etc. off the tread groove.
2) Replace tire:

CAUTION:
• When replacing a tire, make sure to use only the same size, construction and load range as originally installed.
• Avoid mixing radial, belted bias or bias tires on the vehicle.

(1) When large crack on side wall, damage or crack on tread is found.
(2) When the “tread wear indicator” appears as a solid band across the tread.

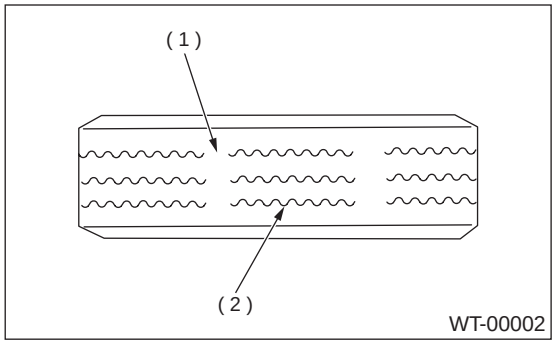

(1) Tread wear indicator
(2) Tire tread

3) When extremely biased wear on tire tread can been seen, after replacing tire, check wheel alignment. <Ref. to FS-6, Wheel Alignment.>

1. TIRE ROTATION

If tires are maintained at the same positions for a long period of time, uneven wear results. Therefore, they should be periodically rotated.
This lengthens service life of tires.

CAUTION:
When rotating tires, replace unevenly worn or damaged tires with new ones.

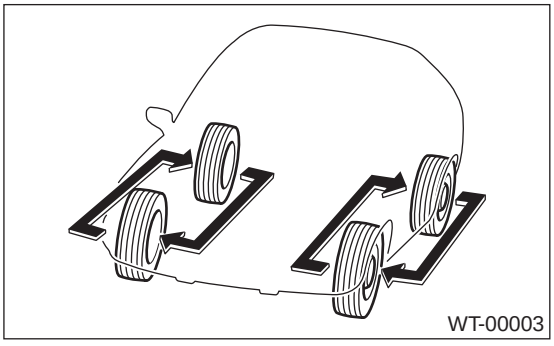

3. Steel Wheel

A: REMOVAL

1) Apply parking brake, and position select lever to “P” or “LOW”.
2) Set shop jacks or a lift to the specified point, and support the vehicle with its wheels slightly contacting the floor.
3) Loosen wheel nuts.
4) Raise the vehicle until its wheels take off the ground using a jack or a lift.
5) Remove wheel nuts and wheels.

NOTE:
• While removing wheels, prevent hub bolts from damage.
• Place wheels with their outer sides facing upward to prevent wheels from damage.

B: INSTALLATION

1) Attach the wheel to the hub by aligning the wheel bolt hole with the hub bolt.
2) Temporarily attach the wheel nuts to the hub bolts. (In the case of aluminum wheel, use SUBARU genuine wheel nut for aluminum wheel.)
3) Manually tighten the nuts making sure the wheel hub hole is aligned correctly to the guide portion of hub.
4) Tighten the wheel nuts in a diagonal selection to the specified torque. Use a wheel nut wrench.

Wheel nut tightening torque:
88 N·m (9 kgf-m, 65 ft-lb)

CAUTION:
• Tighten the wheel nuts in two or three steps by gradually increasing the torque and working diagonally, until the specified torque is reached. For drum brake models, excess tightening of wheel nuts may cause wheels to “judder”.
• Do not depress the wrench with a foot; Always use both hands when tightening.
• Make sure the bolt, nut and the nut seating surface of the wheel are free from oils.

5) If a wheel is removed for replacement or for repair of a puncture, retighten the wheel nuts to the specified torque after running 1,000 km (600 miles).

C: INSPECTION

1) Deformation or damage on the rim can cause air leakage. Check the rim flange for deformation, crack, or damage, and repair or replace as necessary.
2) Jack-up vehicle until wheels clear the floor.
3) Slowly rotate wheel to check rim “runout” using a dial gauge.

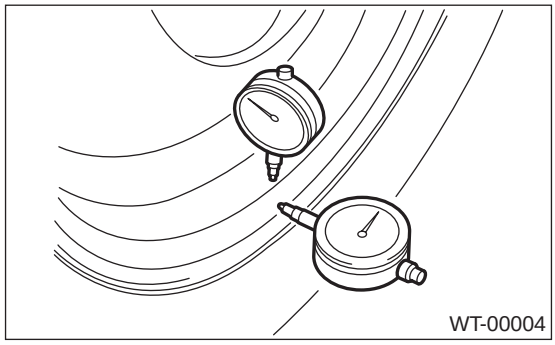

Axial runout limit	Radial runout limit
1.5 mm (0.059 in)	

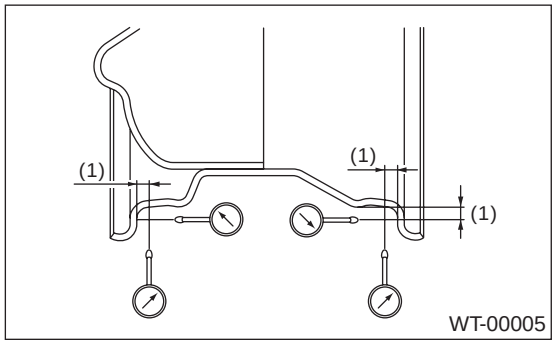

(1) Approx. 7 mm (0.28 in)

4) If rim runout exceeds specifications, remove tire from rim and check runout while attaching dial gauge to positions shown in figure.
5) If measured runout still exceeds specifications, replace the wheel.

4. Aluminum Wheel

A: REMOVAL

Refer to Steel Wheel for removal procedure of aluminum wheels.
<Ref. to WT-5, REMOVAL, Steel Wheel.>

B: INSTALLATION

Refer to Steel Wheel for installation procedure of aluminum wheels.
<Ref. to WT-5, INSTALLATION, Steel Wheel.>

C: INSPECTION

Refer to Steel Wheel for inspection procedure of aluminum wheels.
<Ref. to WT-5, INSPECTION, Steel Wheel.>

Rim runout:

Axial runout limit	Radial runout limit
1.0 mm (0.039 in)	

D: CAUTION

Aluminum wheels are easily scratched. To maintain their appearance and safety, do the following:
1) Do not damage aluminum wheels during removal, disassembly, installation, wheel balancing, etc. After removing aluminum wheels, place them on a rubber mat, etc.
2) While vehicle is being driven, be careful not to ride over sharp obstacles or allow aluminum wheels to contact the shoulder of the road.
3) When installing tire chain, be sure to install it properly not to have a slack; otherwise it may hit wheel while driving.
4) When washing aluminum wheel, use neutral synthetic detergent and water. Avoid using the cleanser including abrasive, hard brushes or an automatic car washer.

5. Wheel Balancing

A: REPLACEMENT

1) Remove balance weights.
2) Using dynamic balancing, measure wheel balance.
3) Select a weight close to the value measured by dynamic balancing.

Balance weight part number (For steel wheel)	Weight
28101AA001	5 g (0.18 oz)
28101AA011	10 g (0.35 oz)
28101AA021	15 g (0.53 oz)
28101AA031	20 g (0.71 oz)
28101AA041	25 g (0.88 oz)
28101AA051	30 g (1.06 oz)
28101AA061	35 g (1.23 oz)
28101AA071	40 g (1.41 oz)
28101AA081	45 g (1.59 oz)
28101AA091	50 g (1.76 oz)
—	55 g (1.94 oz)
28101AA111	60 g (2.12 oz)

Balance weight part number (For aluminum wheel)	Weight
23141GA462	5 g (0.18 oz)
23141GA472	10 g (0.35 oz)
23141GA482	15 g (0.53 oz)
23141GA492	20 g (0.71 oz)
23141GA502	25 g (0.88 oz)
23141GA512	30 g (1.06 oz)
23141GA522	35 g (1.23 oz)
23141GA532	40 g (1.41 oz)
23141GA542	45 g (1.59 oz)
23141GA552	50 g (1.76 oz)
—	55 g (1.94 oz)
23141GA572	60 g (2.12 oz)

4) Install the selected weight to the point designated by dynamic balancing.
5) Using dynamic balancing, measure wheel balance again. Check that wheel balance is correctly adjusted.

B: INSPECTION

1) Proper wheel balance may be lost if the tire is repaired or if it wears. Check the tire for dynamic balance, and repair as necessary.
2) To check for dynamic balance, use a dynamic balancer. Drive in the balance weight on both the top and rear sides of the rim.
3) Some types of balancer can cause damage to the wheel. Use an appropriate balancer when adjusting the wheel balance.
4) Use genuine balance weights.

CAUTION:
Balance weights are available for use with any of 14- to 17-inch wheels.

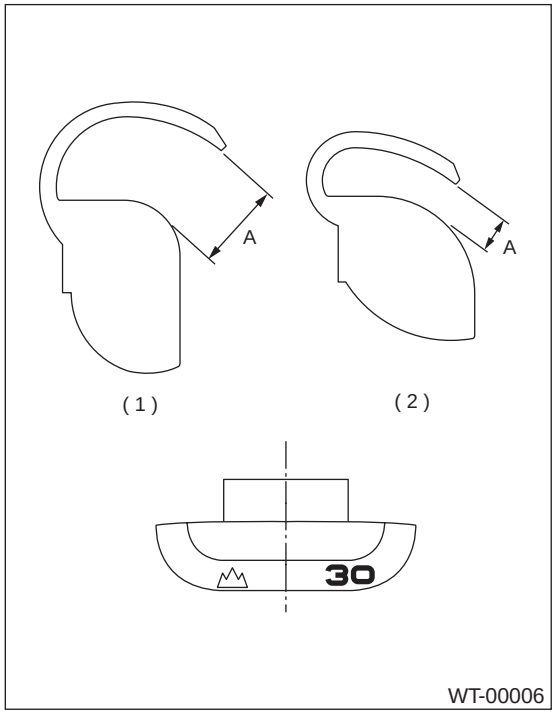

(1) Weight for aluminum wheel
(2) Weight for steel wheel

Service limit: A
Weight for steel wheel;
2.16 mm (0.085 in)
Weight for aluminum wheel;
4.5 mm (0.177 in)

6. “T-type” Tire

A: NOTE

“T-type” tire for temporary use is prepared as a spare tire.

CAUTION:

- **Do not use a tire chain with the “T-type” tire. Because of the smaller tire size, a tire chain will not fit properly and will result in damage to the vehicle and the tire.**
- **Do not drive at a speed greater than 80 km/h (50 MPH).**
- **Drive as slowly as possible and avoid passing over bumps.**

B: REPLACEMENT

Refer to Removal and Installation of Steel Wheel for removal/installation of “T-type” tires. <Ref. to WT-5, Steel Wheel.>

CAUTION:

Replace with a conventional tire as soon as possible since the “T-type” tire is only for temporary use.

C: INSPECTION

1) Check tire inflation pressure.

Specification:

420 kPa (4.2 kg/cm^2, 60 psi)

2) Take stones, glass, nails, etc. out of the tread groove.

3) Check tires for deformation, cracks, partial wear, or wear.

7. Full Wheel Cap

A: REMOVAL

Pry off the full wheel cap with a wheel cap remover inserted between openings in the cap.

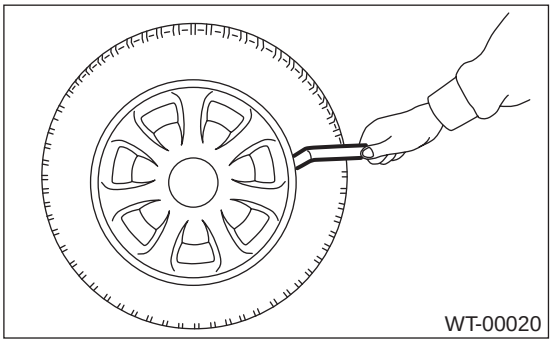

B: INSTALLATION

Align the valve hole in the wheel cap with the valve on the wheel and secure the wheel cap by tapping four points by hand.

C: INSPECTION

1) Check wheels for missing wheel caps.
2) Check pawls of wheel caps for damage or bend.
3) Check wheel caps for cracks.

8. General Diagnostic Table

A: INSPECTION

Symptom	Possible cause	Remedy
Front wheel shimmy	• Worn or improperly inflated of tire.	Replace
	• Wheel is out of balance.	Adjustment
Abnormal tire wear	• Improperly inflated of tire.	Replace
Sways/pitches	• Worn or improperly inflated of tire.	Replace
Wander/pulls	• Worn or improperly inflated of tire.	Replace