TRANSMISSION SECTION

CONTROL SYSTEMS	CS
AUTOMATIC TRANSMISSION	AT
AUTOMATIC TRANSMISSION (DIAGNOSTICS)	AT
MANUAL TRANSMISSION AND DIFFERENTIAL	MT
CLUTCH SYSTEM	CL

This service manual has been prepared to provide SUBARU service personnel with the necessary information and data for the correct maintenance and repair of SUBARU vehicles.
This manual includes the procedures for maintenance, disassembling, reassembling, inspection and adjustment of components and diagnostics for guidance of experienced mechanics.
Please peruse and utilize this manual fully to ensure complete repair work for satisfying our customers by keeping their vehicle in optimum condition. When replacement of parts during repair work is needed, be sure to use SUBARU genuine parts.

FUJI HEAVY INDUSTRIES LTD.

G2300GE5

CLUTCH SYSTEM

CL

		Page
1.	General Description	2
2.	Clutch Disc and Cover	15
3.	Flywheel	20
4.	Release Bearing and Lever	22
5.	Operating Cylinder	25
6.	Master Cylinder	27
7.	Clutch Pipe and Hose	29
8.	Clutch Fluid	30
9.	Clutch Fluid Air Bleeding	31
10.	Clutch Pedal	33
11.	Clutch Switch	40
12.	General Diagnostic Table	41

1. General Description

A: SPECIFICATIONS

Model			Europe and Australia		Except Europe and Australia	
			2.0 L Non-Turbo	2.5 L	2.0 L Non-Turbo	2.5 L
Clutch cover	Diaphragm set load	kgf (lb)	550 (1,213)		450 (992)	580 (1,279)
Clutch disc	Facing material		Woven			
	O.D. × I.D. × thickness	mm (in)	228.6 × 155 × 2.95 (9.00 × 6.10 × 0.1161)		225 × 150 × 3.5 (8.86 × 5.91 × 0.138)	
	Spline O.D.	mm (in)	25.2 (0.992)			
	Depth of rivet head mm (in)	Wear limit	0.3 (0.012)			
	Limit for deflection	mm (in)	1.0 (0.039) at R = 107 (4.21)			
Clutch release lever ratio			1.6			
Clutch pedal	Full stroke	mm (in)	130 — 135 (5.12 — 5.31)			

Model			Australia
			2.0 L Turbo
Clutch cover	Diaphragm set load	kgf (lb)	830 (1,830)
Clutch disc	Facing material		Woven
	O.D. × I.D. × thickness mm (in)	Flywheel side	230 × 150 × 3.2 (9.06 × 5.91 × 0.126)
		Pressure plate side	230 × 150 × 3.5 (9.06 × 5.91 × 0.138)
	Spline O.D.	mm (in)	25.2 (0.992)
	Depth of rivet head mm (in)	Wear limit	0.3 (0.012)
	Limit for deflection	mm (in)	0.8 (0.031) at R = 110 (4.33)
Clutch release lever ratio			1.7
Clutch pedal	Full stroke	mm (in)	130 — 135 (5.12 — 5.31)

B: COMPONENT

1. CLUTCH ASSEMBLY FOR EUROPE AND AUSTRALIA NON-TURBO MODELS

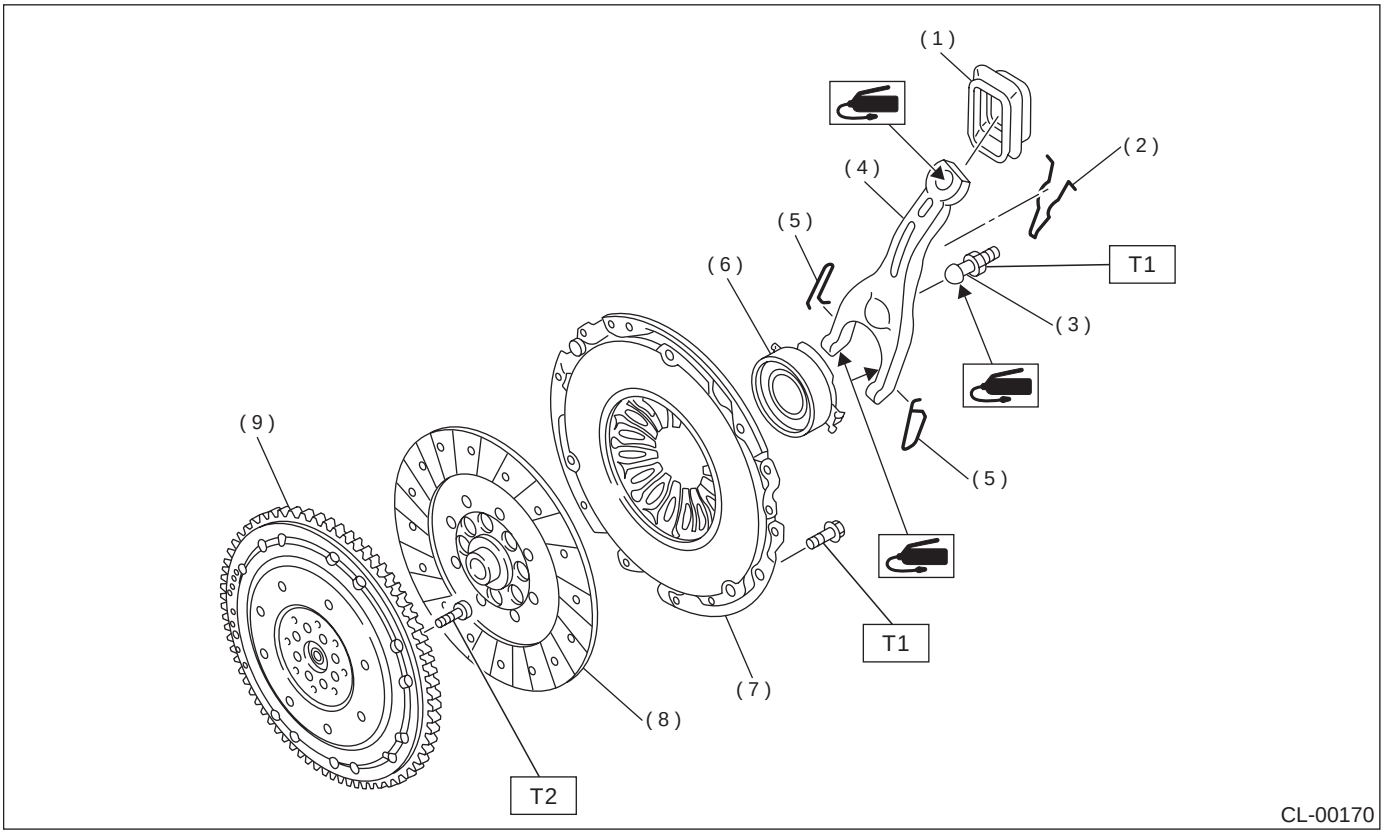

(1) Clutch release lever seal
(2) Retainer spring
(3) Pivot
(4) Release lever
(5) Clip
(6) Release bearing
(7) Clutch cover
(8) Clutch disc
(9) Dual mass flywheel

Tightening torque: N·m (kgf-m, ft-lb)
T1: 15.7 (1.6, 11.6)
T2: 72 (7.3, 52.8)

2. CLUTCH ASSEMBLY FOR EXCEPT EUROPE AND AUSTRALIA NON-TURBO MODELS

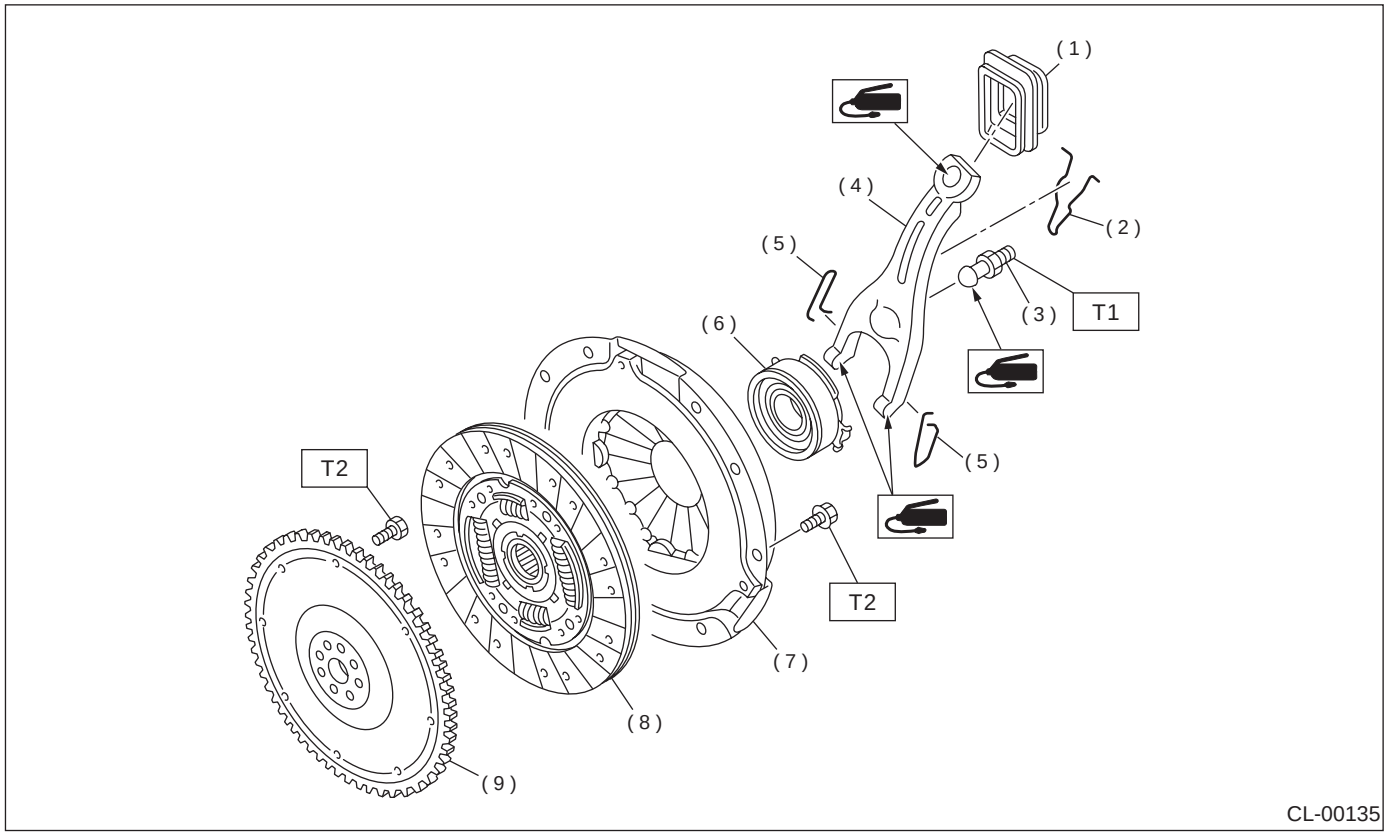

(1) Clutch release lever sealing
(2) Retainer spring
(3) Pivot
(4) Clutch release lever
(5) Clip
(6) Clutch release bearing
(7) Clutch cover
(8) Clutch disc
(9) Flywheel

Tightening torque: N·m (kgf-m, ft-lb)
T1: 15.7 (1.6, 11.6)
T2: 72 (7.3, 52.8)

3. CLUTCH ASSEMBLY (TURBO MODEL)

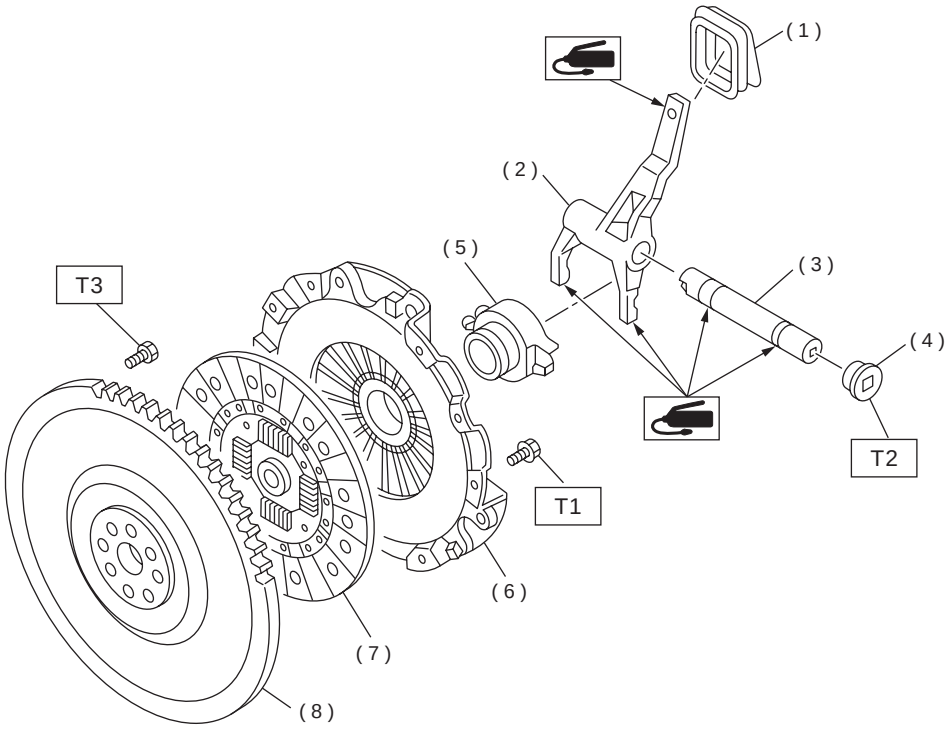

CL-00002

(1) Clutch release lever sealing
(2) Clutch release lever
(3) Clutch release lever shaft
(4) Plug
(5) Clutch release bearing
(6) Clutch cover
(7) Clutch disc
(8) Flywheel

Tightening torque: N·m (kgf-m, ft-lb)
T1: 15.7 (1.6, 11.6)
T2: 44 (4.5, 32.5)
T3: 72 (7.3, 52.8)

4. CLUTCH PIPE AND HOSE (NON-TURBO MODEL)

• LHD Model

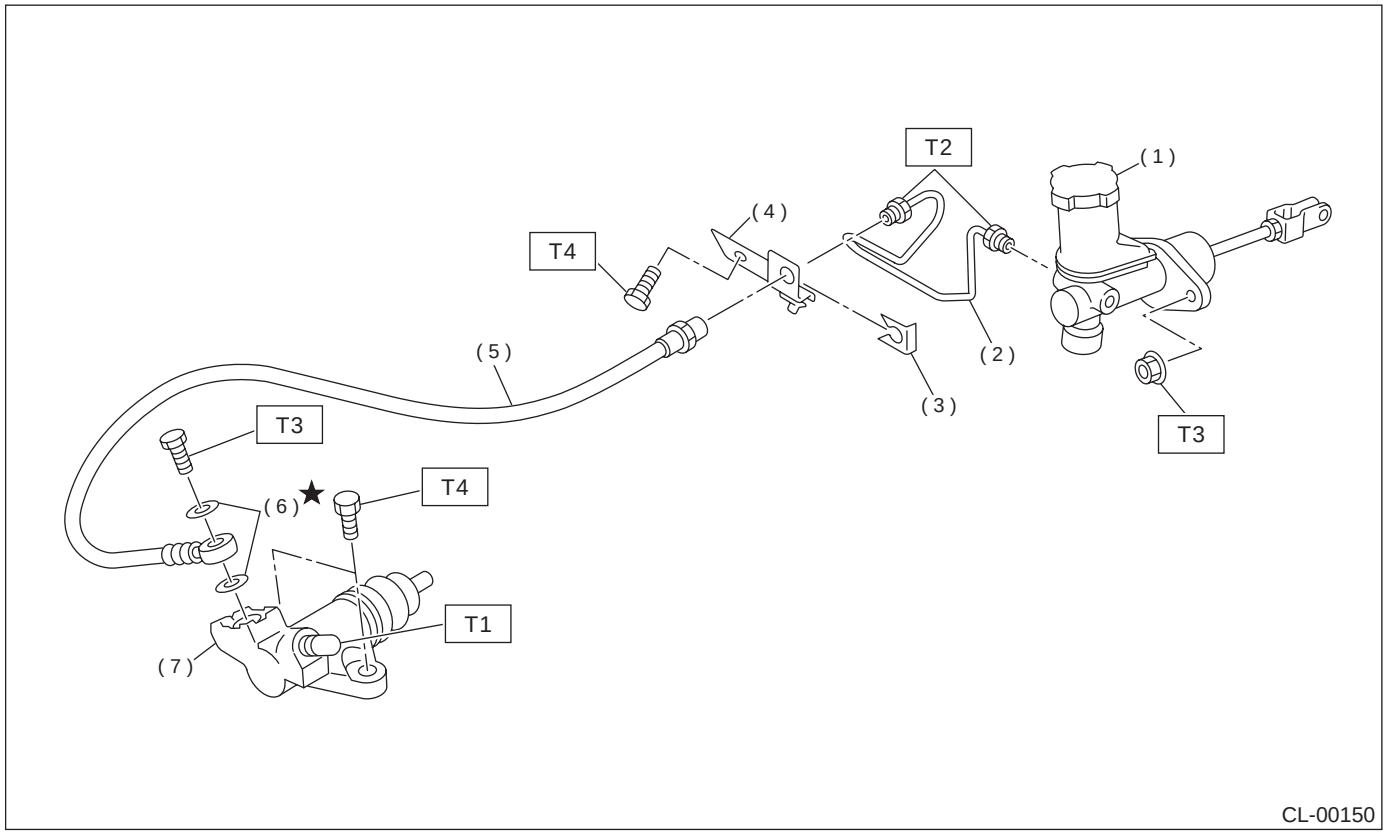

(1) Master cylinder ASSY
(2) Clutch pipe
(3) Clamp
(4) Bracket
(5) Clutch hose
(6) Washer
(7) Operating cylinder

Tightening torque: N·m (kgf-m, ft-lb)
T1: 8 (0.8, 5.8)
T2: 15 (1.5, 10.8)
T3: 18 (1.8, 13.0)
T4: 37 (3.8, 27.5)

• RHD Model

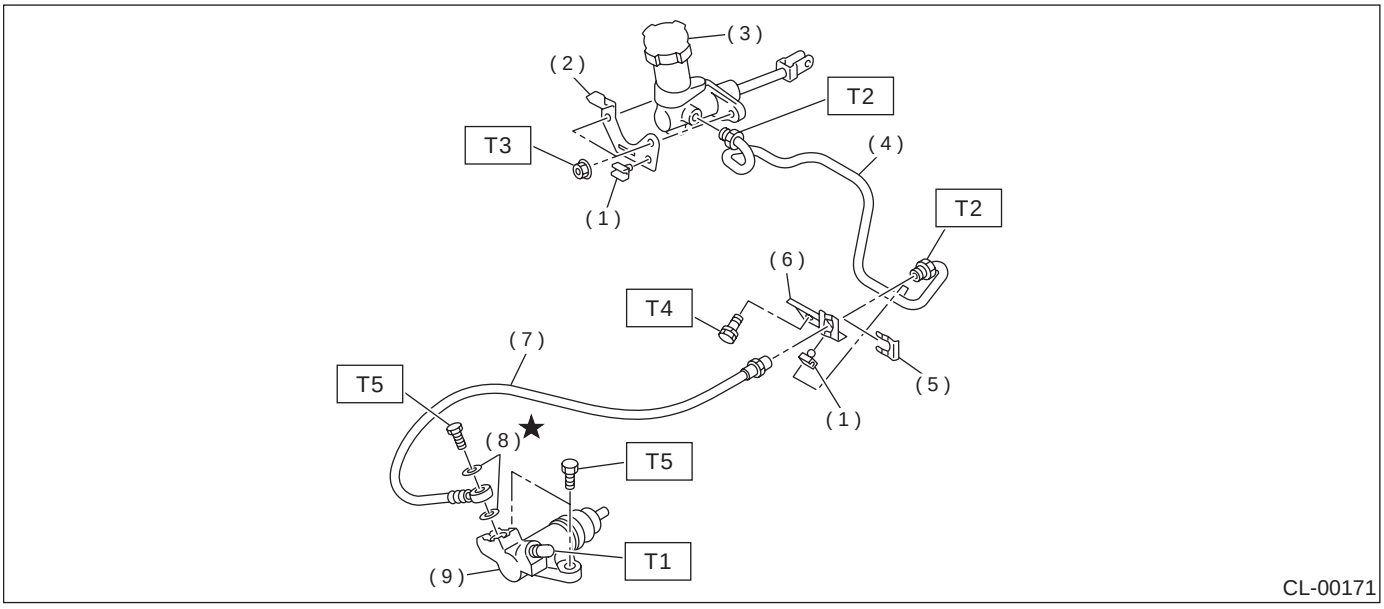

(1) Clip
(2) Bracket A
(3) Master cylinder ASSY
(4) Clutch pipe
(5) Clamp
(6) Bracket B
(7) Clutch hose
(8) Washer
(9) Operating cylinder

Tightening torque: N·m (kgf-m, ft-lb)
T1: 8 (0.8, 5.8)
T2: 15 (1.5, 10.8)
T3: 18 (1.8, 13.0)
T4: 25 (2.5, 18.1)
T5: 37 (3.8, 27.5)

5. CLUTCH PIPE AND HOSE (TURBO MODEL)

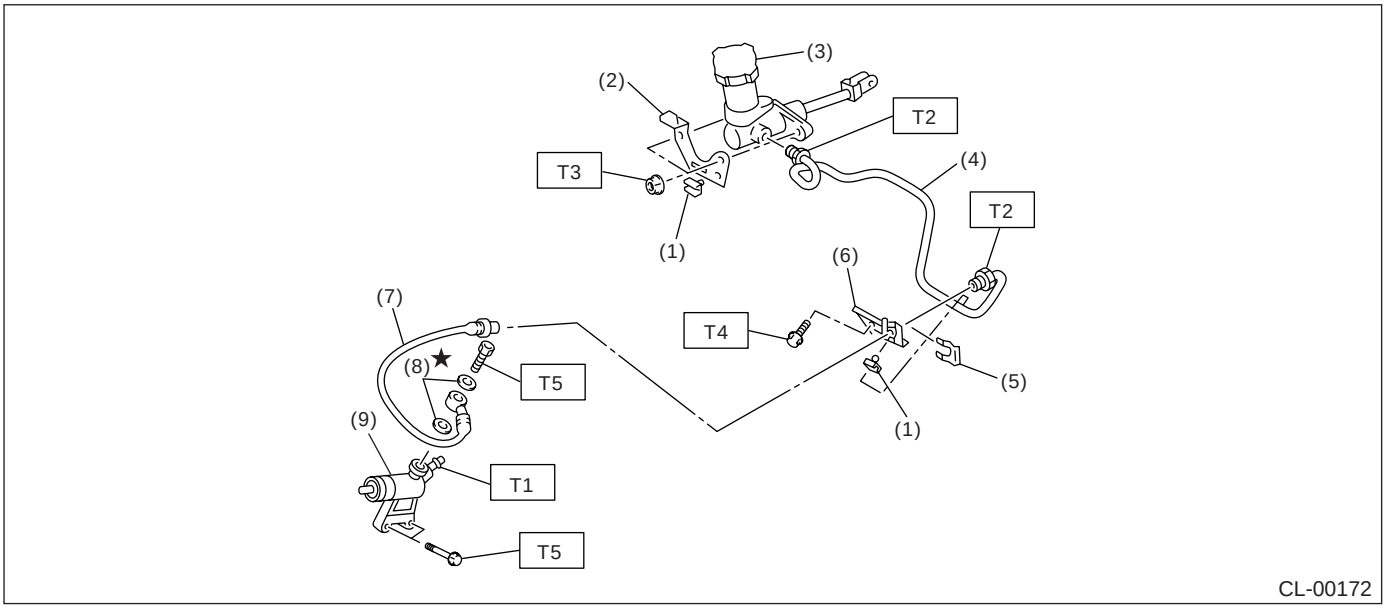

(1) Clip
(2) Bracket A
(3) Master cylinder ASSY
(4) Clutch pipe
(5) Clamp
(6) Bracket B
(7) Clutch hose
(8) Washer
(9) Operating cylinder

Tightening torque: N·m (kgf-m, ft-lb)
T1: 8 (0.8, 5.8)
T2: 15 (1.5, 10.8)
T3: 18 (1.8, 13.0)
T4: 25 (2.5, 18.1)
T5: 37 (3.8, 27.5)

6. MASTER CYLINDER (NON-TURBO MODEL)

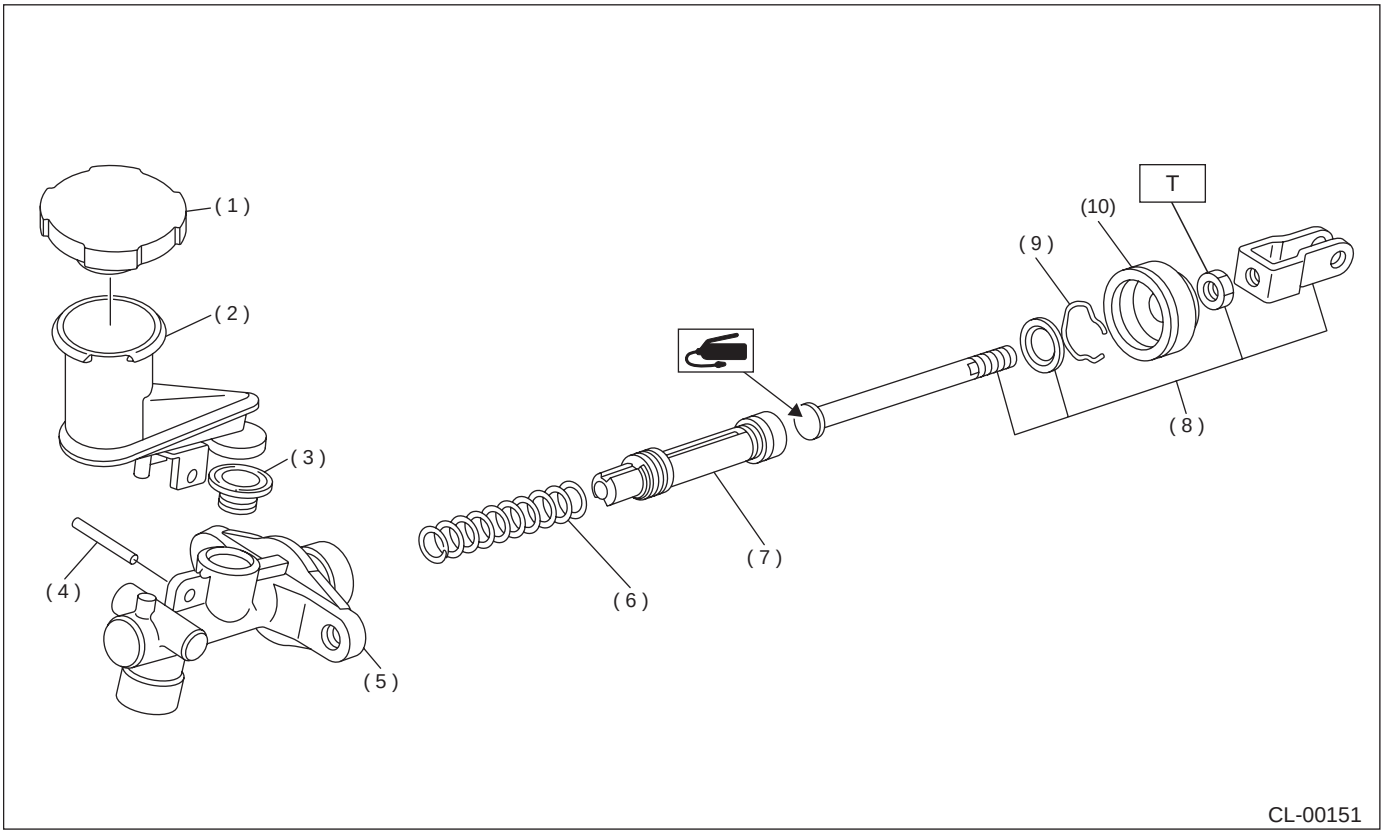

(1) Reservoir cap
(2) Reservoir tank
(3) Oil seal
(4) Straight pin
(5) Master cylinder
(6) Return spring
(7) Piston
(8) Push rod
(9) Piston stop ring
(10) Cylinder boot

Tightening torque: N·m (kgf-m, ft-lb)
T: 10 (1.0, 7)

7. MASTER CYLINDER (TURBO MODEL)

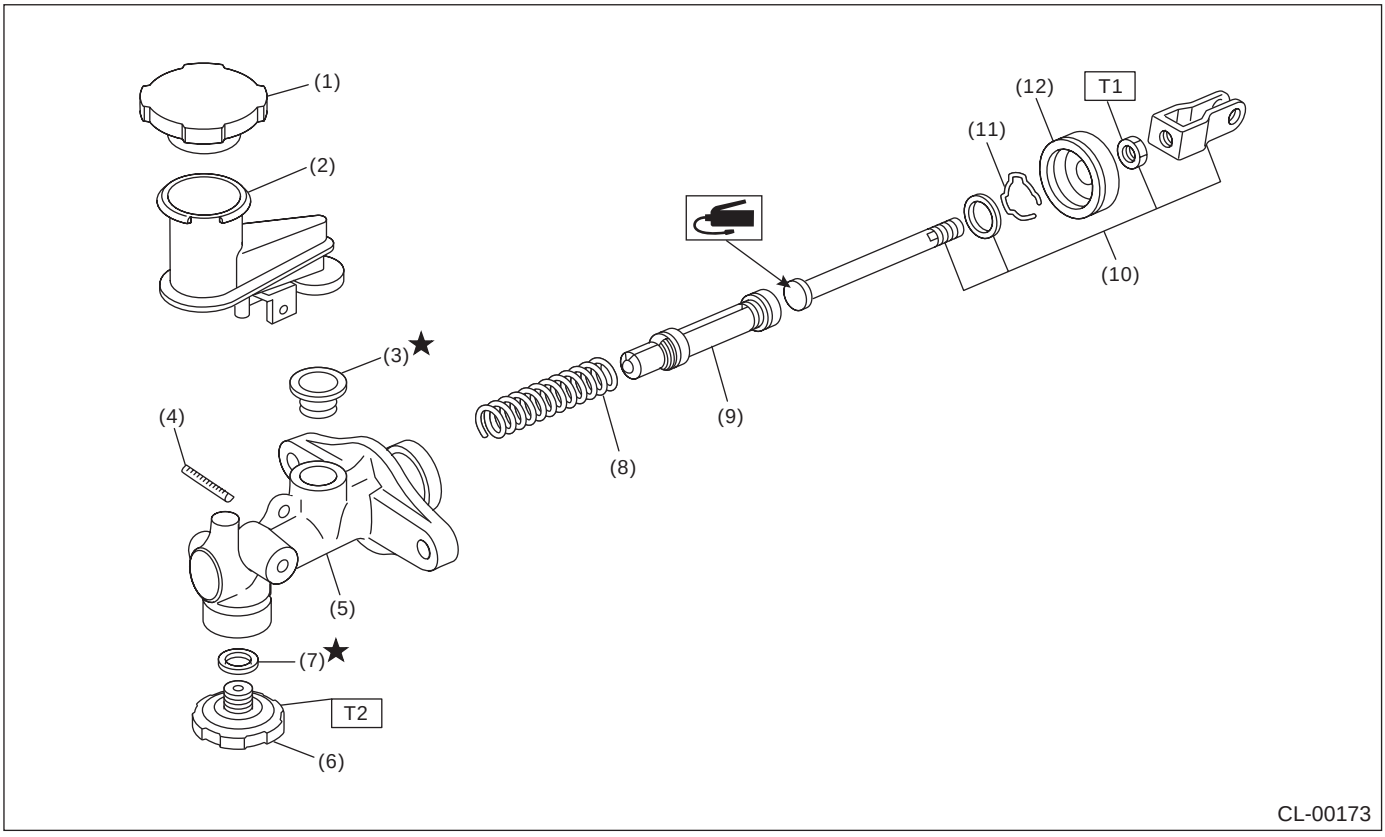

(1) Reservoir cap
(2) Reservoir tank
(3) Oil seal
(4) Straight pin
(5) Master cylinder
(6) Clutch damper
(7) Gasket
(8) Return spring
(9) Piston
(10) Push rod
(11) Piston stop ring
(12) Cylinder boot

Tightening torque: N·m (kgf-m, ft-lb)
T1: 10 (1.0, 7)
T2: 46.6 (4.75, 34.4)

8. CLUTCH PEDAL

• LHD Model

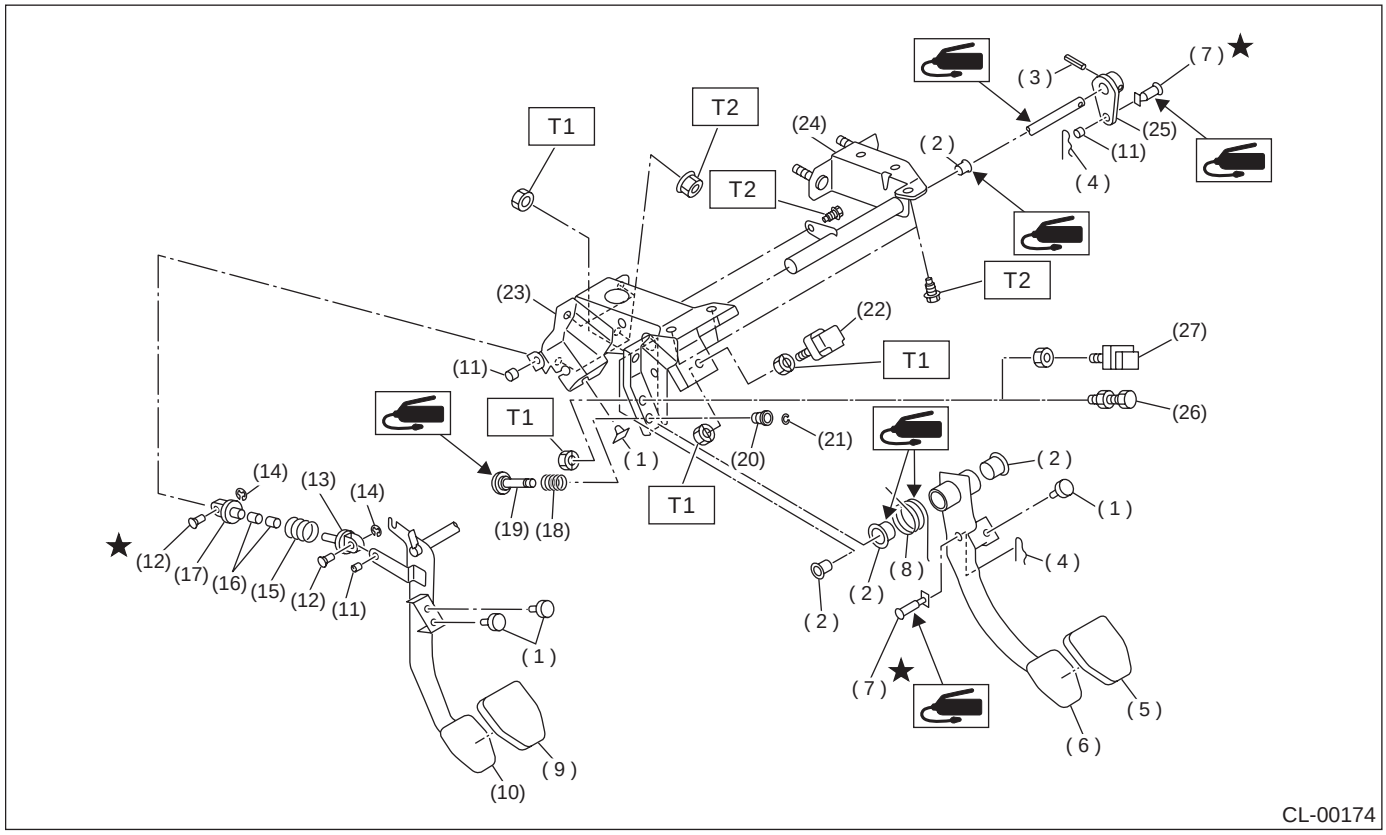

(1) Stopper
(2) Bushing
(3) Spring pin
(4) Snap pin
(5) Brake pedal pad
(6) Brake pedal
(7) Clevis pin
(8) Brake pedal spring
(9) Clutch pedal pad
(10) Clutch pedal
(11) Bushing C
(12) Clutch clevis pin
(13) Assist rod A
(14) Clip
(15) Assist spring
(16) Assist bushing
(17) Assist rod B
(18) Spring A (If equipped)
(19) Rod (If equipped)
(20) Bushing B (If equipped)
(21) Clip (If equipped)
(22) Stop light switch
(23) Pedal bracket
(24) Clutch master cylinder bracket
(25) Lever
(26) Adjusting bolt
(27) Clutch switch (With cruise control)

Tightening torque: N·m (kgf-m, ft-lb)
T1: 8 (0.8, 5.8)
T2: 18 (1.8, 13.0)

• RHD Model

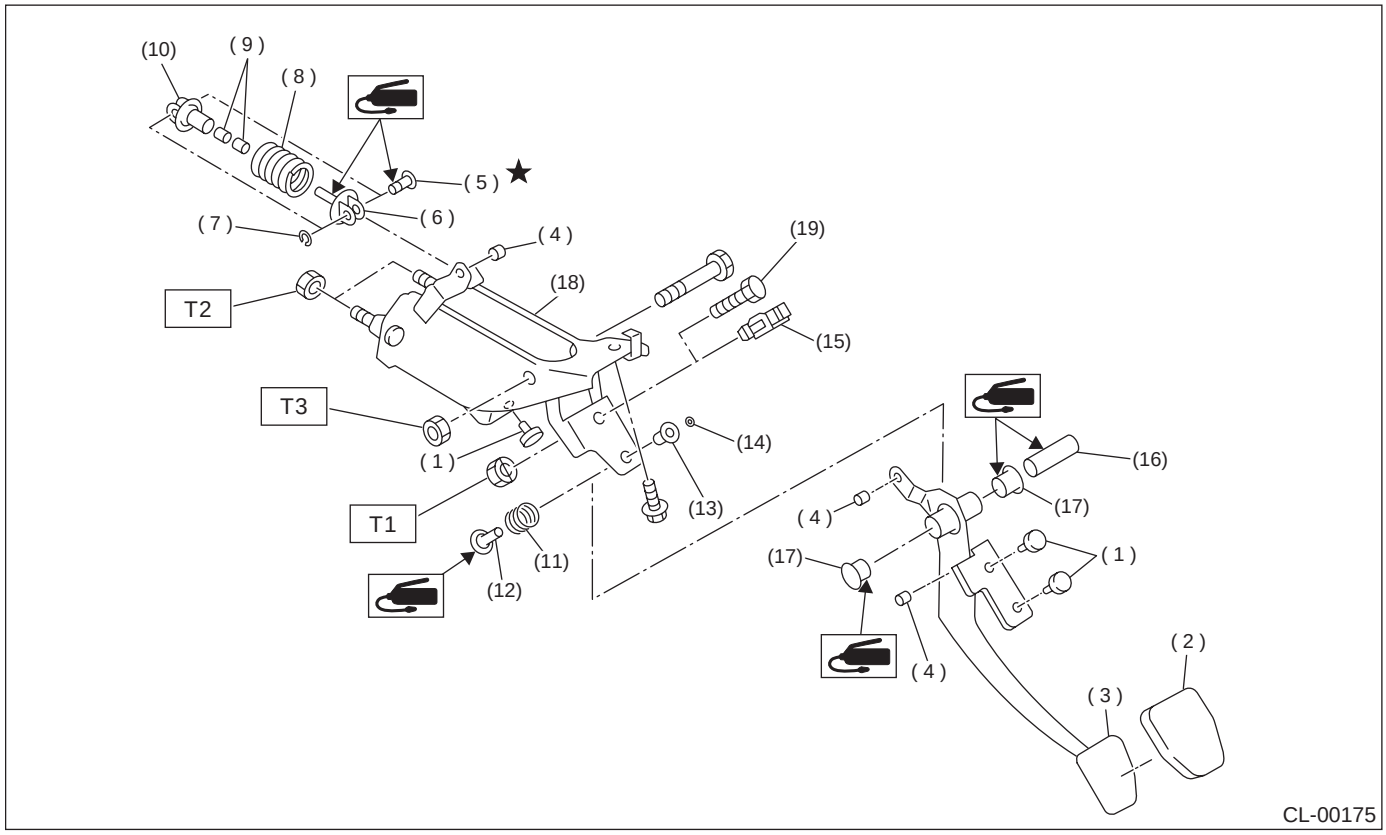

(1) Stopper
(2) Clutch pedal pad
(3) Clutch pedal
(4) Bushing C
(5) Clutch clevis pin
(6) Assist rod A
(7) Clip
(8) Assist spring
(9) Assist bushing
(10) Assist rod B
(11) Spring A (If equipped)
(12) Rod (If equipped)
(13) Bushing B (If equipped)
(14) Clip (If equipped)
(15) Clutch switch (With cruise control)
(16) Spacer
(17) Bushing
(18) Clutch pedal bracket
(19) Adjusting bolt

Tightening torque: N·m (kgf-m, ft-lb)	
T1:	***8 (0.8, 5.8)***
T2:	***18 (1.8, 13.0)***
T3:	***30 (3.1, 22.4)***

C: CAUTION

- Wear working clothing, including a cap, protective goggles, and protective shoes during operation.
- Remove contamination including dirt and corrosion before removal, installation or disassembly.
- Keep the disassembled parts in order and protect them from dust or dirt.
- Before removal, installation or disassembly, be sure to clarify the failure. Avoid unnecessary removal, installation, disassembly, and replacement.
- Be careful not to burn your hands, because each part on the vehicle is hot after running.
- Use SUBARU genuine fluid, grease etc. or the equivalent. Do not mix fluid, grease etc. with that of another grade or from other manufacturers.
- Be sure to tighten fasteners including bolts and nuts to the specified torque.
- Place shop jacks or safety stands at the specified points.
- Apply grease onto sliding or revolution surfaces before installation.
- Before installing O-rings or snap rings, apply sufficient amount of fluid to avoid damage and deformation.
- Before securing a part on a vise, place cushioning material such as wood blocks, aluminum plate, or shop cloth between the part and the vise.
- Keep fluid away from the vehicle body. If any fluid contacts the vehicle body, immediately flush the area with water.

D: PREPARATION TOOL

1. SPECIAL TOOLS

ILLUSTRATION	TOOL NUMBER	DESCRIPTION	REMARKS
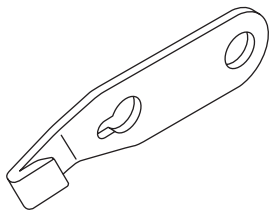 ST-498497100	498497100	CRANKSHAFT STOPPER	Used for stopping rotation of flywheel when loosening tightening bolt, etc.
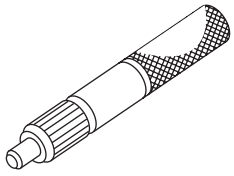 ST-499747100	499747100	CLUTCH DISC GUIDE	Used when removing and installing clutch disc to flywheel.
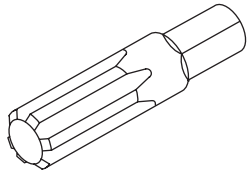 ST-499057000	499057000	TORX PLUS	Used for removing and installing flywheel (Dual mass flywheel type).

2. GENERAL PURPOSE TOOLS

TOOL NAME	REMARKS
Circuit Tester	Used for measuring resistance, voltage and ampere.
Dial Gauge	Used for measuring clutch disk run-out.

2. Clutch Disc and Cover

A: REMOVAL

1. EUROPE AND AUSTRALIA NON-TURBO MODELS

1) Remove transmission assembly from vehicle body. <Ref. to MT-32, REMOVAL, Manual Transmission Assembly.>
2) Insert ST on flywheel.
ST 499747100 CLUTCH DISC GUIDE

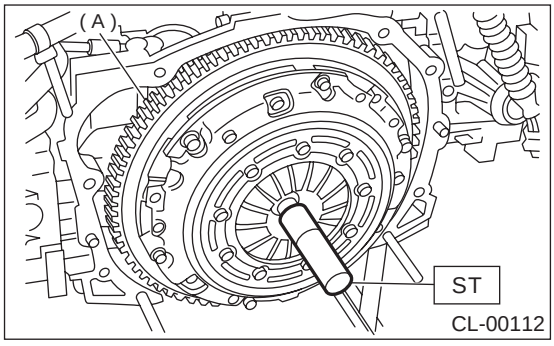

(A) Dual mass flywheel

3) Put matching marks on flywheel and clutch cover before removing clutch cover.

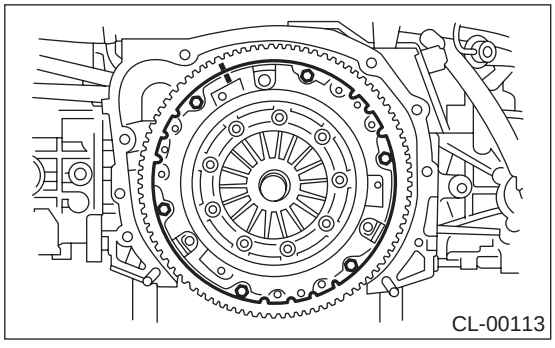

4) Remove clutch cover and clutch disc.

NOTE:
- Take care not to allow oil on the clutch disc facing.
- Do not disassemble either clutch cover or clutch disc.
- Put matching marks to flywheel and clutch cover before removing clutch cover.

2. EXCEPT EUROPE AND AUSTRALIA NON-TURBO MODELS AND TURBO MODEL

1) Remove transmission assembly from vehicle body. <Ref. to MT-32, REMOVAL, Manual Transmission Assembly.>
2) Install ST on flywheel.
ST 499747100 CRANKSHAFT STOPPER

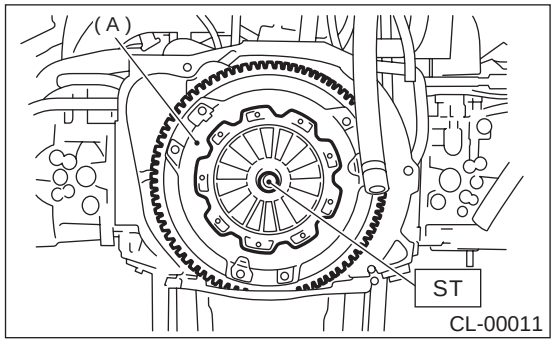

(A) Clutch cover

3) Remove clutch cover and clutch disc.

NOTE:
- Take care not to allow oil on the clutch disc facing.
- Do not disassemble either clutch cover or clutch disc.

B: INSTALLATION

1. EUROPE AND AUSTRALIA NON-TURBO MODELS

1) Insert ST into the clutch disc and install them on the flywheel by inserting the ST end into the pilot bearing.

NOTE:
When installing clutch disc, be careful its direction.

ST 499747100 CLUTCH DISC GUIDE

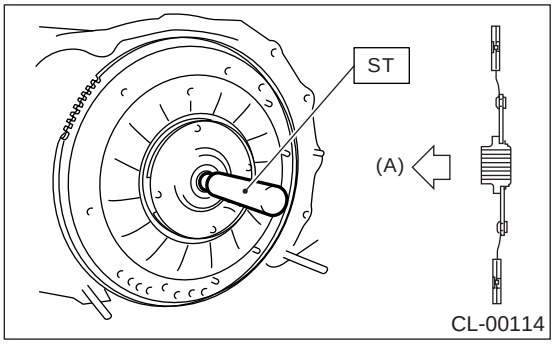

(A) Flywheel
(B) Flywheel side

2) Install clutch cover on flywheel and tighten bolts to the specified torque.

NOTE:
- Align matching marks.
- Note the front and rear of the clutch disc when installing.
- Tighten clutch cover installing bolts gradually. Each bolt should be tightened to the specified torque in a crisscross fashion.

Tightening torque:
15.7 N·m (1.6 kgf-m, 11.6 ft-lb)

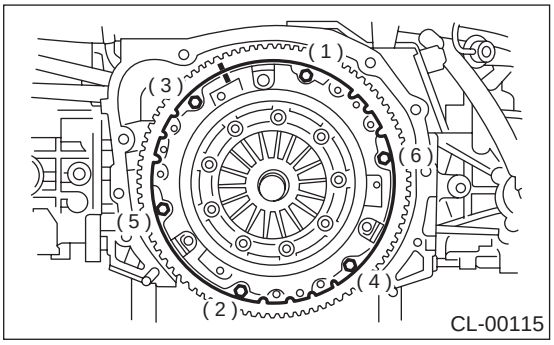

3) Remove ST.
ST 499747100 CLUTCH DISC GUIDE
4) Install transmission assembly. <Ref. to MT-35, INSTALLATION, Manual Transmission Assembly.>

2. EXCEPT EUROPE AND AUSTRALIA NON-TURBO MODELS AND TURBO MODEL

1) Insert ST into the clutch disc and install them on the flywheel by inserting the ST end into the pilot bearing.

NOTE:
When installing clutch disc, be careful its direction.
ST 499747100 CLUTCH DISC GUIDE

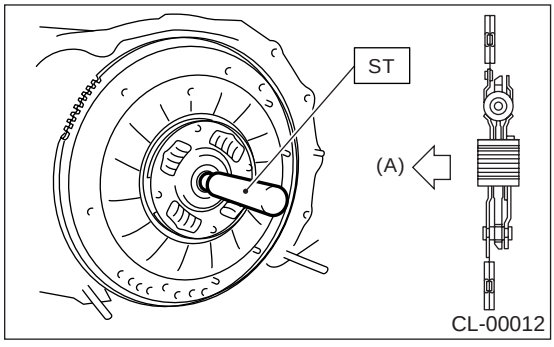

(A) Flywheel side

2) Install clutch cover on flywheel and tighten bolts to the specified torque.

NOTE:
- When installing the clutch cover on the flywheel, position the clutch cover so that there is a gap of 120° or more between “0” marks on the flywheel and clutch cover. (“0” marks indicate the directions of residual unbalance.)
- Note the front and rear of the clutch disc when installing.
- Temporarily tighten bolts by hand. Each bolt should be tightened to the specified torque in a crisscross fashion.

Tightening torque:
15.7 N·m (1.6 kgf-m, 11.6 ft-lb)

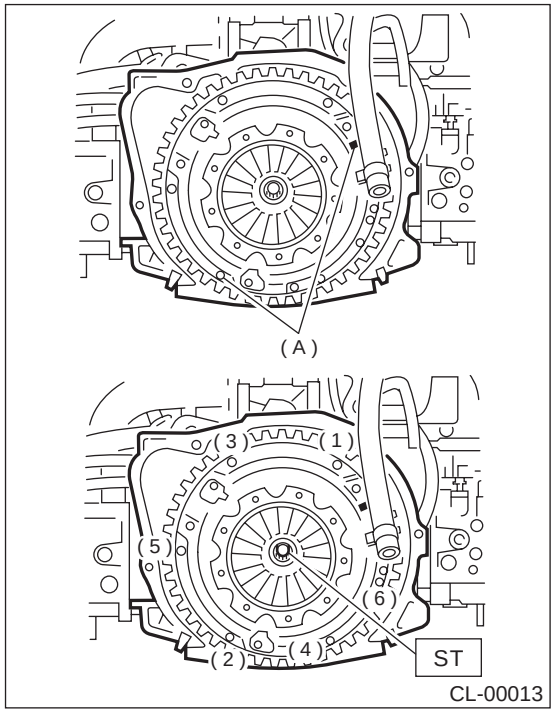

(A) “0” marks

3) Remove ST.
ST 499747100 CLUTCH DISC GUIDE
4) Install transmission assembly. <Ref. to MT-35, INSTALLATION, Manual Transmission Assembly.>

C: INSPECTION

1. CLUTCH DISC

1) Facing wear
Measure the depth of rivet head from the surface of facing. Replace if facings are worn locally or worn down to less than the specified value.

Depth of rivet head:
Limit of sinking
0.3 mm (0.012 in)

NOTE:
Do not wash clutch disc with any cleaning fluid.

Europe and Australia Non-Turbo models

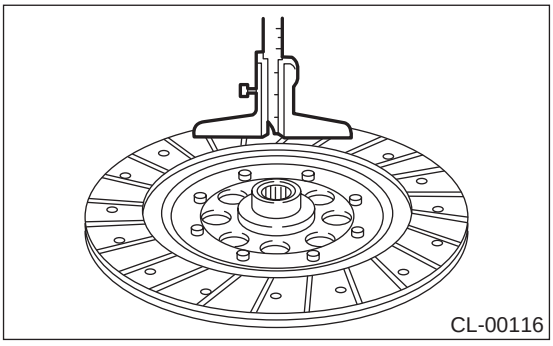

Except Europe and Australia Non-Turbo models and Turbo model

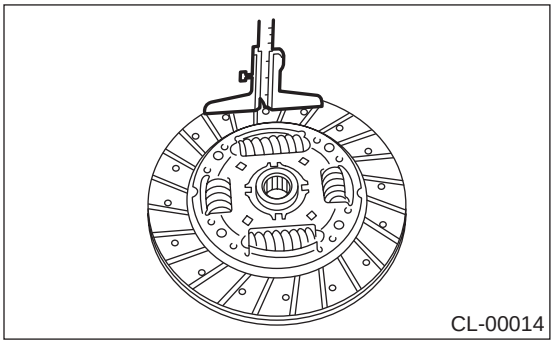

2) Hardened facing
Correct by using emery paper or replace.

3) Oil soakage on facing
Replace clutch disc and inspect transmission front oil seal, transmission case mating surface, engine rear oil seal and other points for oil leakage.

Europe and Australia Non-Turbo models

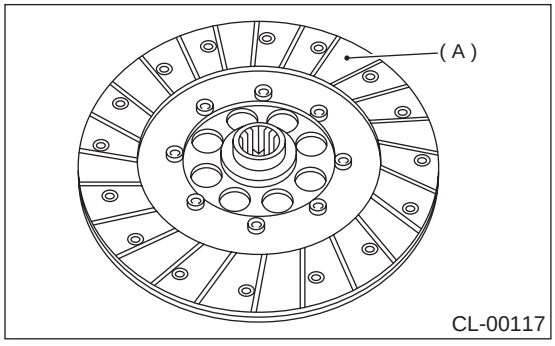

(A) Clutch facing

Except Europe and Australia Non-Turbo models and Turbo model

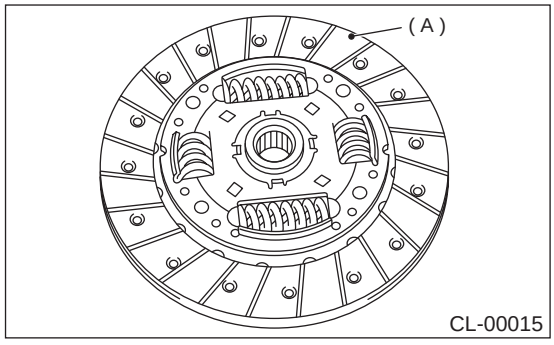

(A) Clutch facing

4) Deflection on facing
If deflection exceeds the specified value at the outer circumference of facing, repair or replace.
ST 499747100 CLUTCH DISC GUIDE

Limit for deflection:
Non-Turbo model
1.0 mm (0.039 in) at R = 107 mm (4.21 in)
Turbo model
0.8 mm (0.03 in) at R = 110 mm (4.33 in)

Europe and Australia Non-Turbo models

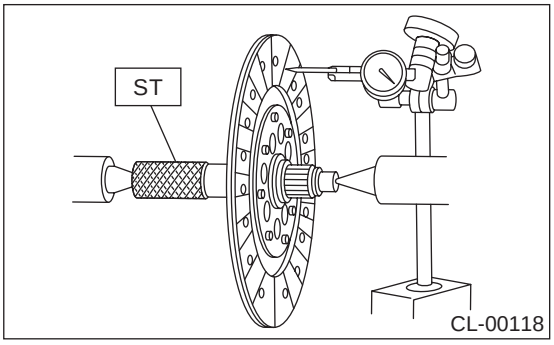

Except Europe and Australia Non-Turbo models and Turbo model

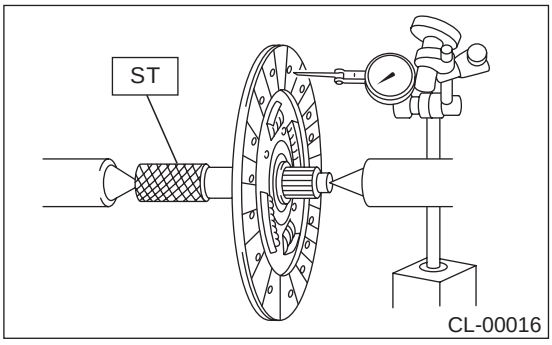

5) Worn spline, loose rivets and torsion spring failure
Replace defective parts.

Europe and Australia Non-Turbo models

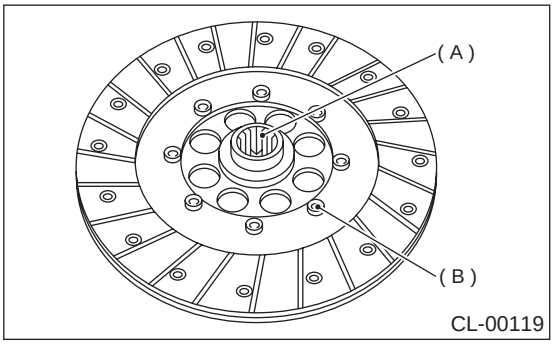

(A) Spline
(B) Rivet
(C) Torsion spring

Except Europe and Australia Non-Turbo models and Turbo model

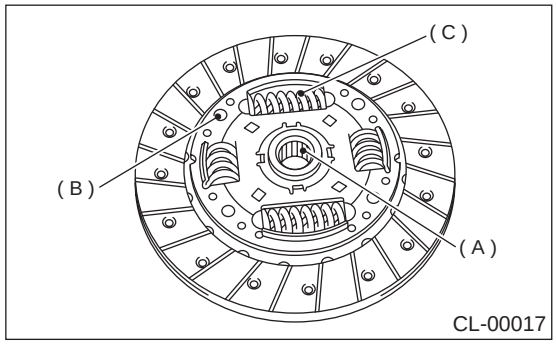

(A) Spline
(B) Rivet
(C) Torsion spring

2. CLUTCH COVER

NOTE:
Visually check for the following items without disassembling, and replace or repair if defective.
1) Loose thrust rivet.
2) Damaged or worn bearing contact area at center of diaphragm spring.

Europe and Australia Non-Turbo models

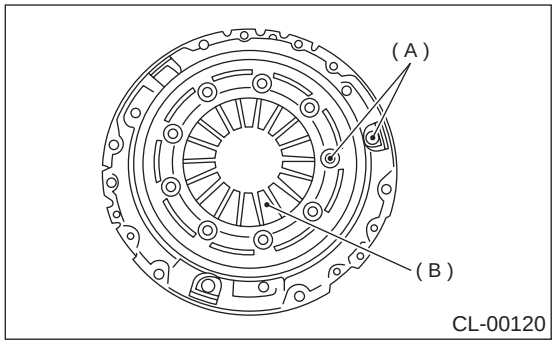

(A) Thrust rivet
(B) Diaphragm spring

Except Europe and Australia models

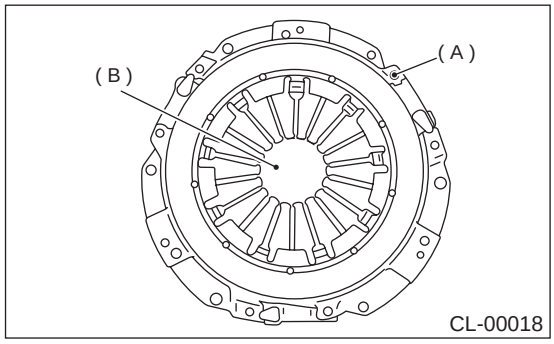

(A) Thrust rivet
(B) Diaphragm spring

3) Damaged or worn disc contact surface of pressure plate.
4) Loose strap plate setting bolt.
5) Worn diaphragm sliding surface.

Europe and Australia Non-Turbo models

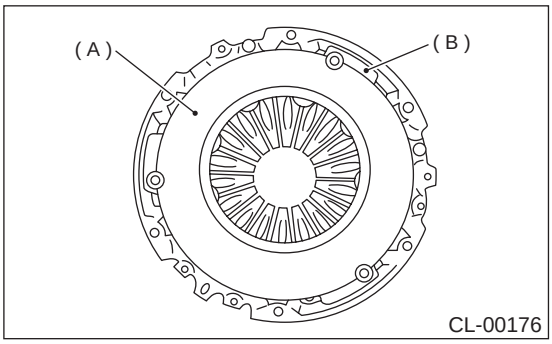

(A) Pressure plate
(B) Strap plate

Except Europe and Australia Non-Turbo models and Turbo model

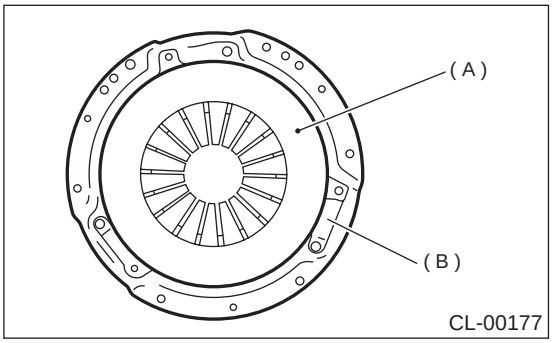

(A) Pressure plate
(B) Strap plate

3. Flywheel

A: REMOVAL

1. EUROPE AND AUSTRALIA NON-TURBO MODELS

1) Remove transmission assembly. <Ref. to MT-32, REMOVAL, Manual Transmission Assembly.>
2) Remove clutch cover and clutch disc. <Ref. to CL-15, REMOVAL, Clutch Disc and Cover.>
3) Remove flywheel using ST1 and ST2.
ST1 498497100 CRANKSHAFT STOPPER
ST2 499057000 TORX PLUS

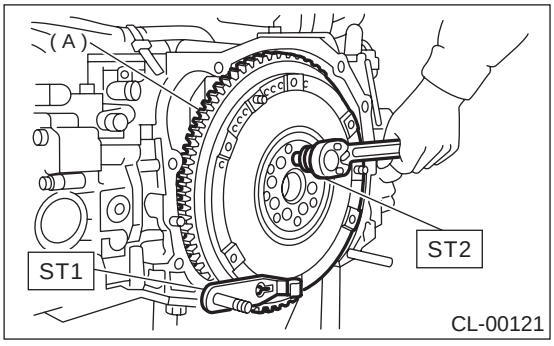

(A) Flywheel

2. EXCEPT EUROPE AND AUSTRALIA NON-TURBO MODELS AND TURBO MODEL

1) Remove transmission assembly. <Ref. to MT-32, REMOVAL, Manual Transmission Assembly.>
2) Remove clutch cover and clutch disc. <Ref. to CL-15, REMOVAL, Clutch Disc and Cover.>
3) Using ST, remove flywheel.
ST 498497100 CRANKSHAFT STOPPER

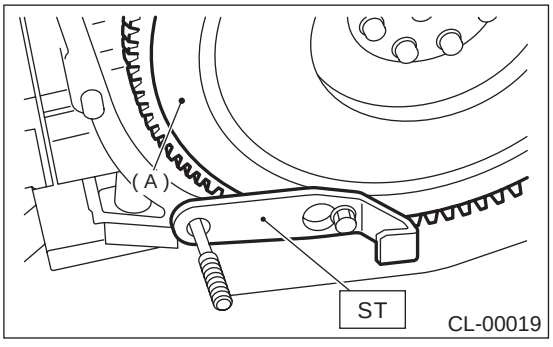

(A) Flywheel

B: INSTALLATION

1. EUROPE AND AUSTRALIA NON-TURBO MODELS

1) Install flywheel and ST.
ST 498497100 CRANKSHAFT STOPPER

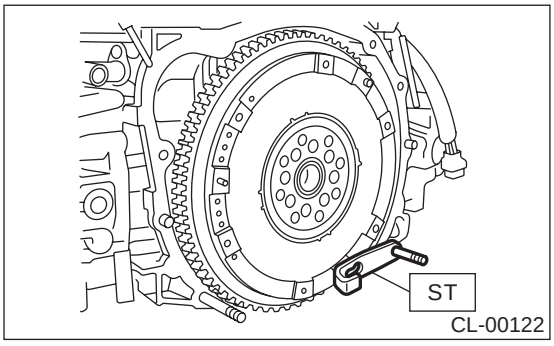

2) Tighten the flywheel attaching bolts to the specified torque.
ST 499057000 TORX PLUS

NOTE:
Tighten flywheel installing bolts gradually. Each bolt should be tightened to the specified torque in a crisscross fashion.

Tightening torque:
72 N·m (7.3 kgf-m, 52.8 ft-lb)

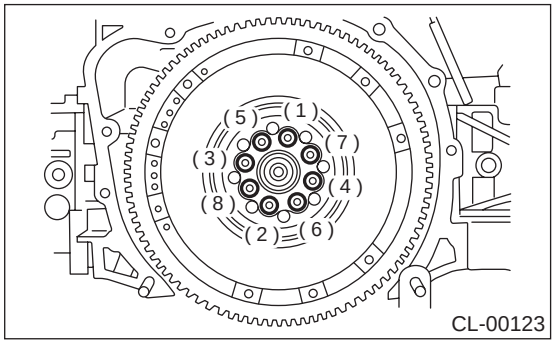

3) Install clutch disc and cover. <Ref. to CL-15, EUROPE AND AUSTRALIA NON-TURBO MODELS, INSTALLATION, Clutch Disc and Cover.>
4) Install transmission assembly. <Ref. to MT-35, INSTALLATION, Manual Transmission Assembly.>

2. EXCEPT EUROPE AND AUSTRALIA NON-TURBO MODELS AND TURBO MODEL

1) Install flywheel and ST.
ST 498497100 CRANKSHAFT STOPPER

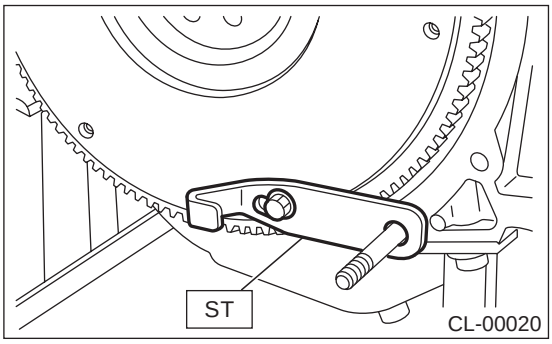

2) Tighten the flywheel attaching bolts to the specified torque.

NOTE:
Tighten flywheel installing bolts gradually. Each bolt should be tightened to the specified torque in a crisscross fashion.

Tightening torque:
72 N·m (7.3 kgf-m, 52.8 ft-lb)

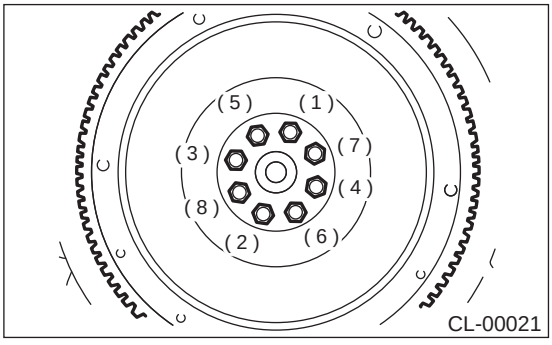

3) Install clutch disc and cover. <Ref. to CL-16, EXCEPT EUROPE AND AUSTRALIA NON-TURBO MODELS AND TURBO MODEL, INSTALLATION, Clutch Disc and Cover.>
4) Install transmission assembly. <Ref. to MT-35, INSTALLATION, Manual Transmission Assembly.>

C: INSPECTION

CAUTION:
Since this bearing is grease sealed and is of a non-lubrication type, do not wash with gasoline or any solvent.

1) Damage of facing and ring gear
If defective, replace flywheel.
Europe and Australia Non-Turbo models

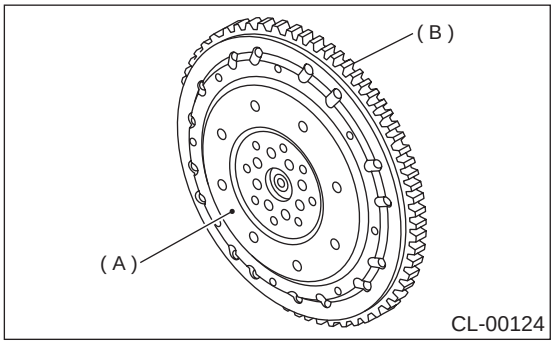

(A) Flywheel
(B) Ring gear

Except Europe and Australia Non-Turbo models and Turbo model

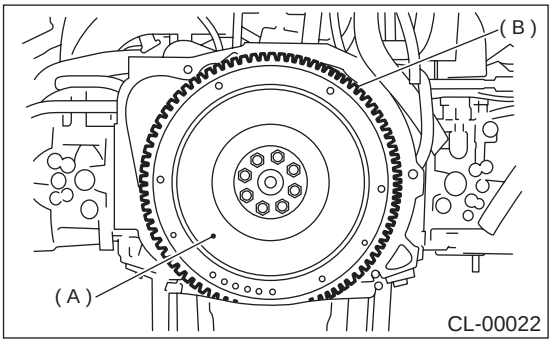

(A) Flywheel
(B) Ring gear

2) Smoothness of rotation
Rotate ball bearing applying pressure in thrust direction.
3) If noise or excessive play is noted, replace flywheel.

4. Release Bearing and Lever

A: REMOVAL

1. NON-TURBO MODEL

1) Remove transmission assembly from vehicle body.
<Ref. to MT-32, REMOVAL, Manual Transmission Assembly.>
2) Remove the two clips from clutch release lever and remove release bearing.

NOTE:
Be careful not to deform clips.

3) Remove release lever seal.

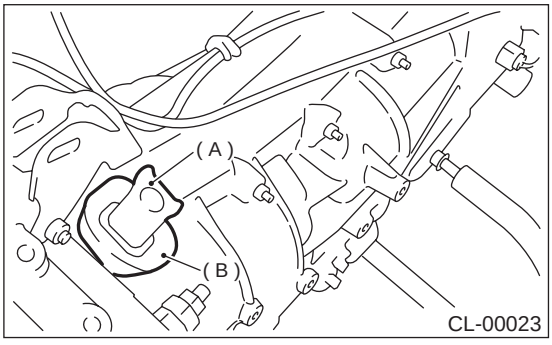

(A) Clutch release lever
(B) Release lever seal

4) Remove release lever retainer spring from release lever pivot with a screwdriver by accessing it through clutch housing release lever hole. Then remove release lever.

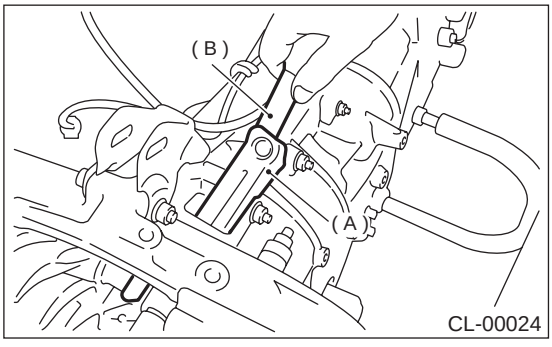

(A) Clutch release lever
(B) Screwdriver

5) Remove pivot

2. TURBO MODEL

1) Remove the transmission assembly from vehicle body. <Ref. to MT-32, REMOVAL, Manual Transmission Assembly.>
2) Remove the clutch release lever from transmission.
3) Put the clutch release bearing in engine side.
4) Remove the clutch release bearing from clutch cover using a flat-type screwdriver.

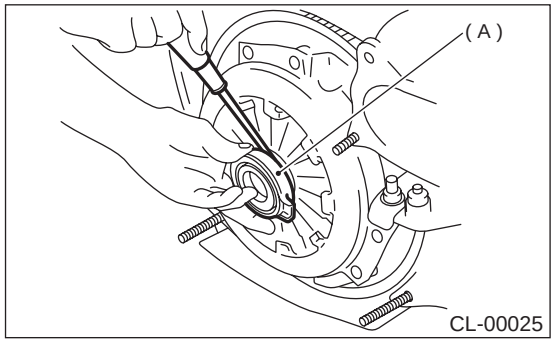

(A) Clutch release bearing

B: INSTALLATION

1. NON-TURBO MODEL

NOTE:
Before or during assembling, lubricate the following points with a light coat of grease.
- Contact surface of lever and pivot
- Contact surface of lever and bearing
- Transmission main shaft spline (Use grease containing molybdenum disulphide.)
- Contact surface of lever and operating cylinder

1) Install pivot.

Tightening torque:
15.7 N·m (1.6 kgf-m, 11.6 ft-lb)

2) While pushing release lever to pivot and twisting it to both sides, fit retainer spring onto the constricted portion of pivot.

NOTE:
- Apply grease (SUNLIGHT 2: P/N 003602010) to contact point of release lever and operating cylinder. <Ref. to CL-3, COMPONENT, General Description.>
- Confirm that retainer spring is securely fitted by observing it through the main case hole.

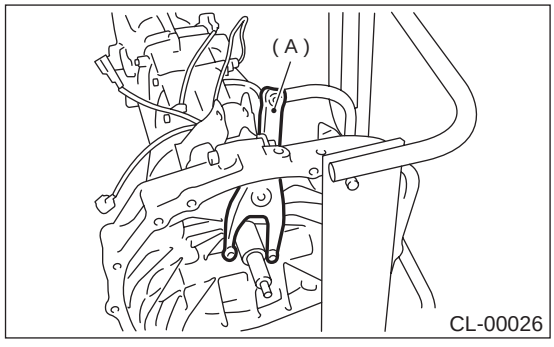

(A) Release lever

3) Install release bearing and fasten it with two clips.

4) Install release lever seal.

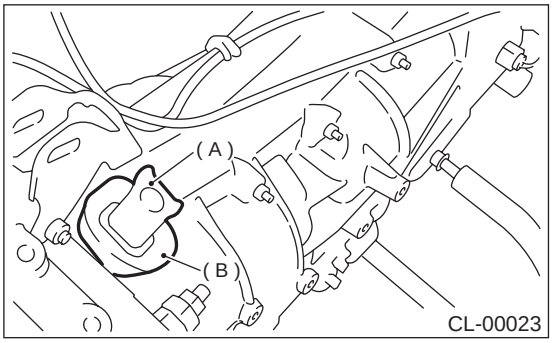

(A) Release lever
(B) Release lever seal

5) Install transmission assembly.
<Ref. to MT-35, INSTALLATION, Manual Transmission Assembly.>

2. TURBO MODEL

1) Install the release bearing on transmission.
2) Insert the release fork into release bearing tab.

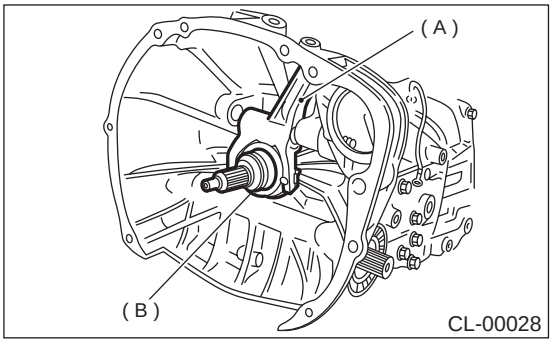

(A) Release fork
(B) Release bearing

3) Apply grease to the specified points:
- Spline FX2200 (Part No. 000040901)
- Shaft SUNLIGHT 2 (Part No. 003602010)

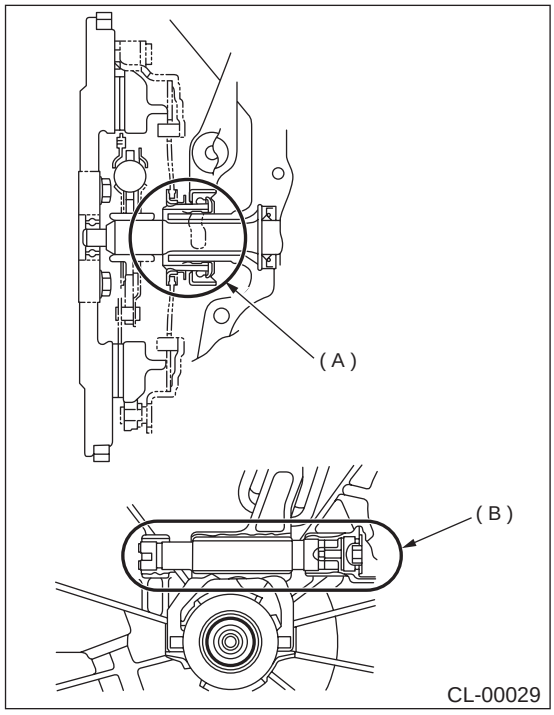

(A) Spline (FX2200)
(B) Shaft (SUNLIGHT 2)

4) Insert the release fork shaft into release fork.

NOTE:
Make sure the cutout portion of release fork shaft contacts spring pin.

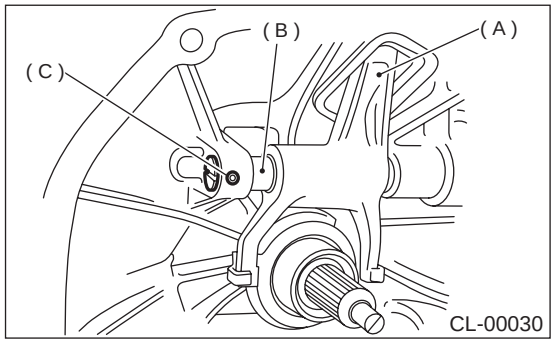

(A) Release fork
(B) Release shaft
(C) Spring pin

5) Tighten the plug.

Tightening torque:
44 N·m (4.5 kgf-m, 32.5 ft-lb)

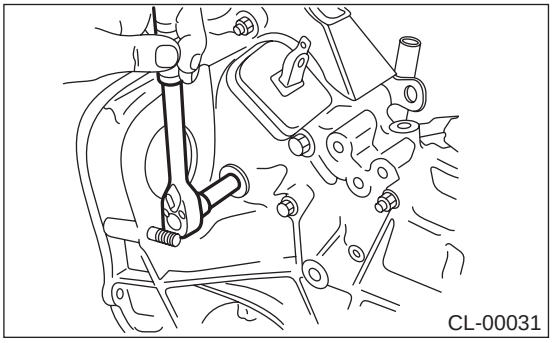

6) Install the transmission assembly. <Ref. to MT-35, INSTALLATION, Manual Transmission Assembly.>

C: INSPECTION

1. RELEASE BEARING

NOTE:
Since this bearing is grease sealed and is of a non-lubrication type, do not wash with gasoline or any solvent when servicing the clutch.

1) Check the bearing for smooth movement by applying force in the radial direction.

Radial direction stroke:
1.4 mm (0.055 in)

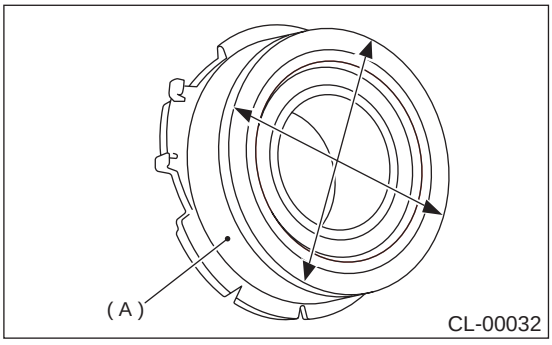

(A) Bearing case

2) Check the bearing for smooth rotation by applying pressure in the thrust direction.

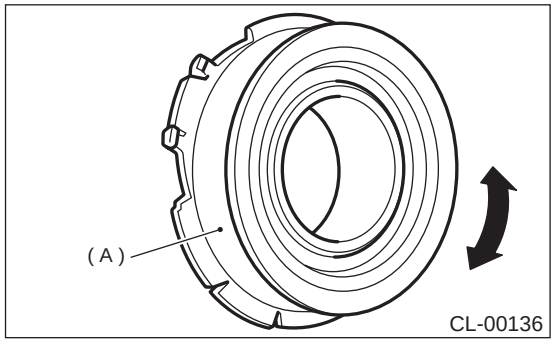

(A) Bearing case

3) Check wear and damage of bearing case surface contacting with lever.

2. RELEASE LEVER

1) Check lever pivot portion and the point of contact with release bearing case for wear.

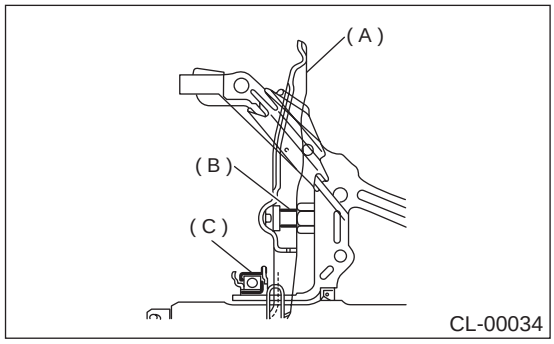

(A) Clutch release lever
(B) Pivot
(C) Clutch release bearing

5. Operating Cylinder

A: REMOVAL

1) Remove air cleaner case. (Non-Turbo model)
<Ref. to IN(H4SO)-6, REMOVAL, Air Cleaner Case.>
2) Remove intercooler. (Turbo model)
<Ref. to IN(H4DOSTC)-13, REMOVAL, Intercooler.>
3) Remove clutch hose from operating cylinder.

CAUTION:
Cover hose joint to prevent clutch fluid from flowing out.

- Non-Turbo model

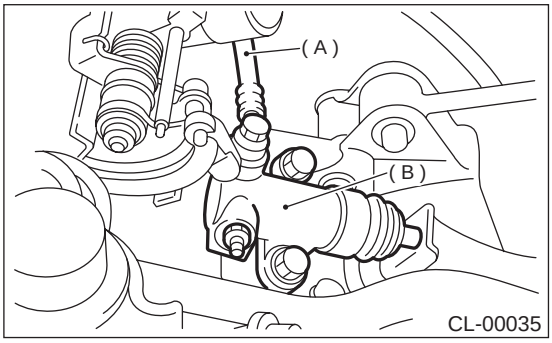

(A) Clutch hose
(B) Operating cylinder

- Turbo model

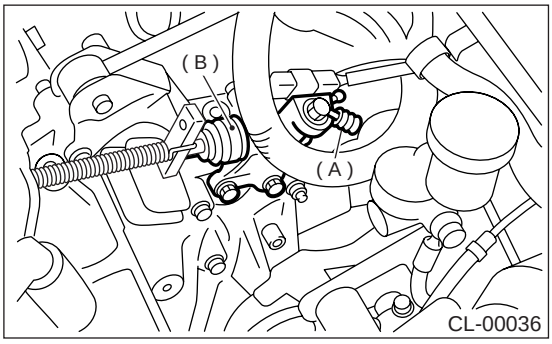

(A) Clutch hose
(B) Operating cylinder

4) Remove operating cylinder from transmission.

- Non-Turbo model

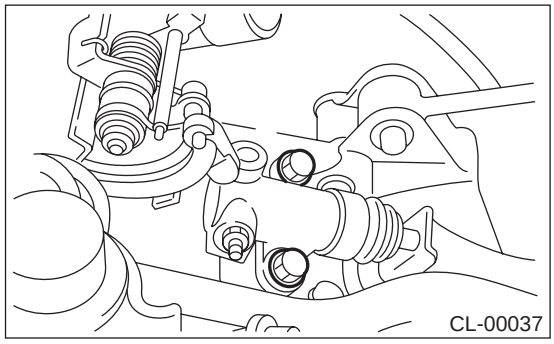

- Turbo model

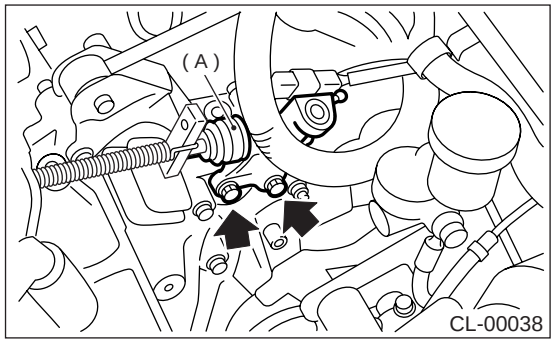

(A) Operating cylinder

B: INSTALLATION

1) Install in the reverse order of removal.

NOTE:
Before installing operating cylinder, apply grease (SUNLIGHT 2: P/N 003602010) to contact point of release lever and operating cylinder.

Tightening torque:
T1: 18 N·m (1.8 kgf-m, 13.0 ft-lb)
T2: 37 N·m (3.8 kgf-m, 27.5 ft-lb)

- Non-Turbo model

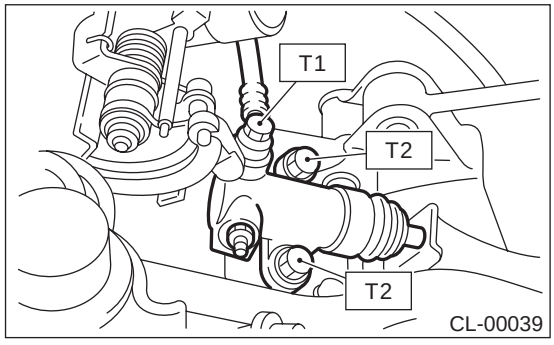

- Turbo model

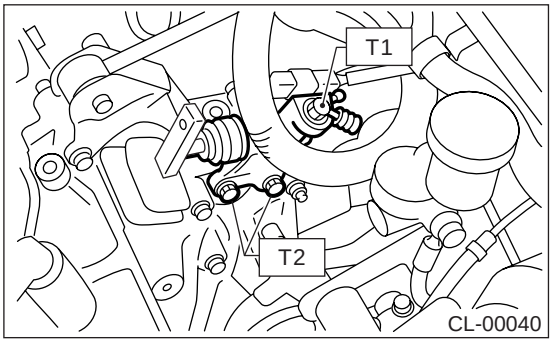

NOTE:
- Install the clutch hose facing mark upward.
- Do not twist clutch hose while installing.

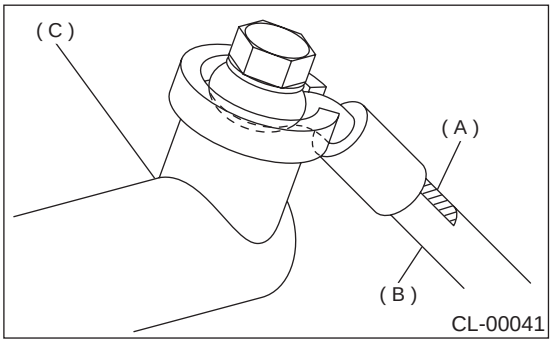

(A) Mark
(B) Clutch hose
(C) Operating cylinder

2) After bleeding air from operating cylinder, ensure that clutch operates properly.
<Ref. to CL-31, Clutch Fluid Air Bleeding.>

C: INSPECTION

1) Check operating cylinder for damage. If operating cylinder is damaged, replace it.
2) Check operating cylinder for fluid leakage or damage on boot. If any leakage or damage is found, replace operating cylinder.

6. Master Cylinder

A: REMOVAL

1) Thoroughly drain brake fluid from reservoir tank.
2) Remove snap pin, clevis pin and separate push rod of master cylinder from clutch pedal.

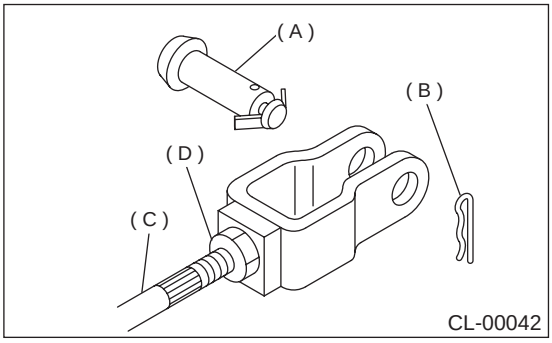

(A) Clevis pin
(B) Snap pin
(C) Push rod
(D) Lock nut

3) Remove air cleaner case. (Non-Turbo model) <Ref. to IN(H4SO)-6, REMOVAL, Air Cleaner Case.>
4) Remove intercooler. (Turbo model) <Ref. to IN(H4DOSTC)-13, REMOVAL, Intercooler.>
5) Remove clutch pipe from master cylinder.
6) Remove master cylinder with reservoir tank.

CAUTION:
Be extremely careful not to spill brake fluid. Brake fluid spilt on the vehicle body will harm the paint surface; wipe it off quickly if spilt.

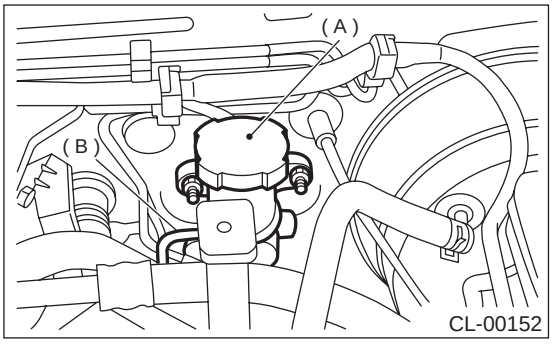

(A) Master cylinder
(B) Clutch pipe

B: INSTALLATION

1) Install master cylinder to body, and install clutch pipe to master cylinder.

CAUTION:
Check that pipe is routed properly.

Tightening torque:
T1: 15 N·m (1.5 kgf-m, 10.8 ft-lb)
T2: 18 N·m (1.8 kgf-m, 13.0 ft-lb)

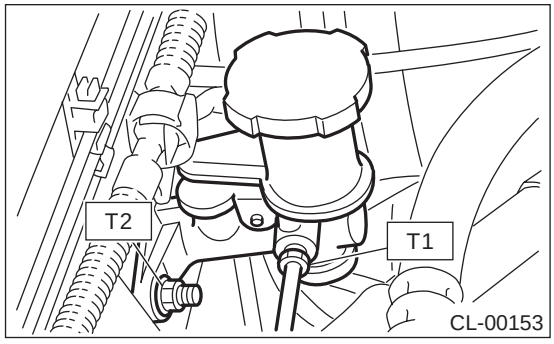

2) Connect push rod of master cylinder to clutch pedal, and install clevis pin and snap pin.

NOTE:
Apply grease to clevis pin.

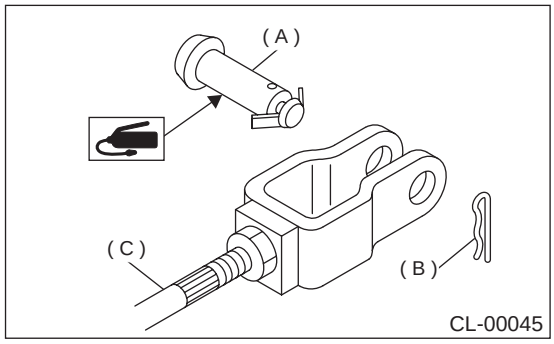

(A) Clevis pin
(B) Snap pin
(C) Push rod

3) After bleeding air from system, ensure that clutch operates properly.
<Ref. to CL-31, Clutch Fluid Air Bleeding.>
4) Install air cleaner case. (Non-Turbo model)
<Ref. to IN(H4SO)-6, INSTALLATION, Air Cleaner Case.>
5) Install intercooler. (Turbo model)
<Ref. to IN(H4DOSTC)-14, INSTALLATION, Intercooler.>

C: DISASSEMBLY

1) Remove straight pin and reservoir tank.

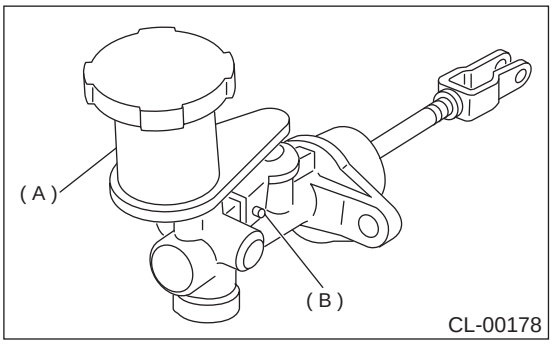

(A) Reservoir tank
(B) Straight pin

2) Remove oil seal.

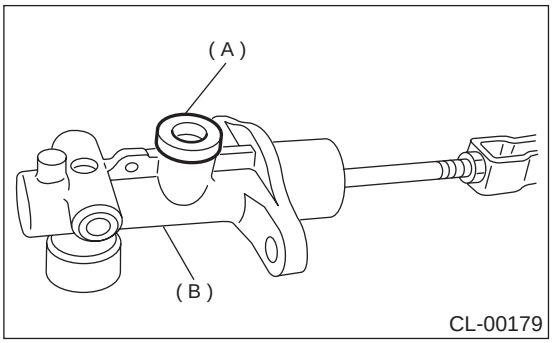

(A) Oil seal
(B) Master cylinder

3) Move the cylinder boot backward.

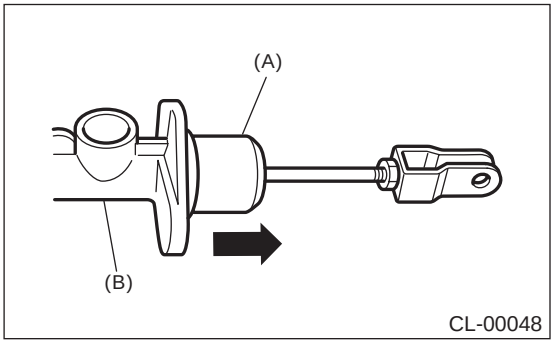

(A) Cylinder boot
(B) Master cylinder

4) Remove snap ring.

CAUTION:
Be careful when removing the snap ring to prevent the rod, washer, piston and return spring from flying out.

D: ASSEMBLY

1) Apply a coat of grease to the contacting surfaces of the push rod and piston before installation.

Grease:
SILICONE GREASE G40M (Part No. 004404003)

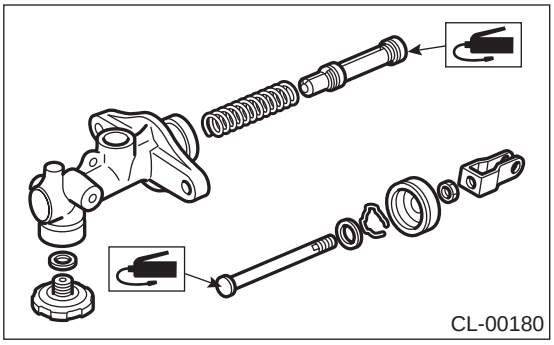

2) To assemble the master cylinder reverse the sequence of disassembly procedure.

Tightening torque:
T: 10 N·m (1.0 kgf-m, 7 ft-lb)

E: INSPECTION

If any damage, deformation, wear, swelling, rust or other faults are found on the cylinder, piston, push rod, fluid reservoir, return spring and gasket, replace the faulty part.

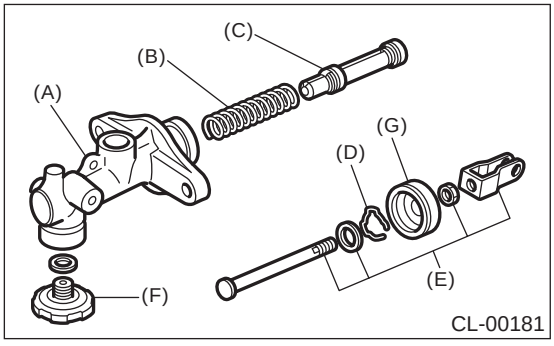

(A) Master cylinder body
(B) Return spring
(C) Piston
(D) Snap ring
(E) Rod ASSY
(F) Clutch dumper (Turbo model)
(G) Cylinder boot

7. Clutch Pipe and Hose

A: REMOVAL

1) Remove air cleaner case and air intake duct.
2) Drain clutch fluid. <Ref. to CL-30, Clutch Fluid.>
3) Remove clutch pipe from the clutch hose and master cylinder.
4) Pull out clamp, then remove clutch hose from bracket.

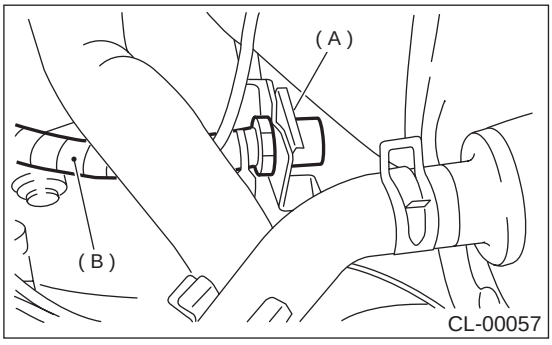

(A) Clamp
(B) Clutch hose

5) Remove hose from operating cylinder.

B: INSTALLATION

Install in the reverse order of removal.

NOTE:
Bleed clutch fluid. <Ref. to CL-31, Clutch Fluid Air Bleeding.>

Tightening torque:
T1: 15 N·m (1.5 kgf-m, 10.8 ft-lb)
T2: 18 N·m (1.8 kgf-m, 13.0 ft-lb)

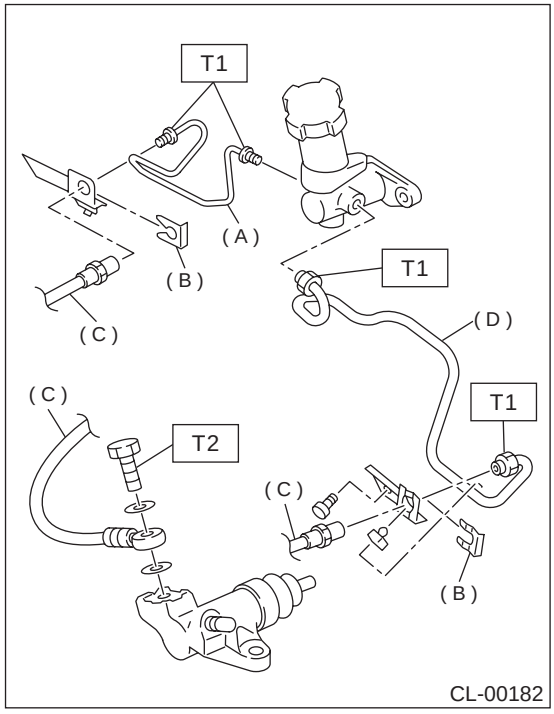

(A) Clutch pipe (LHD model)
(B) Clamp
(C) Clutch hose
(D) Clutch pipe (RHD model)

C: INSPECTION

Check pipes and hoses for cracks, breakage, or damage. Check joints for fluid leakage. If any cracks, breakage, damage, or leakage is found, repair or replace the applicable pipe or hose.

8. Clutch Fluid

A: INSPECTION

1) Park vehicle on a level surface.
2) Check the clutch fluid for significant deterioration. If it is deteriorated, replace it.
3) Inspect the fluid level using the scale on the outside of the clutch master cylinder tank. If the level is below “MIN”, add clutch fluid to bring it up to “MAX”.

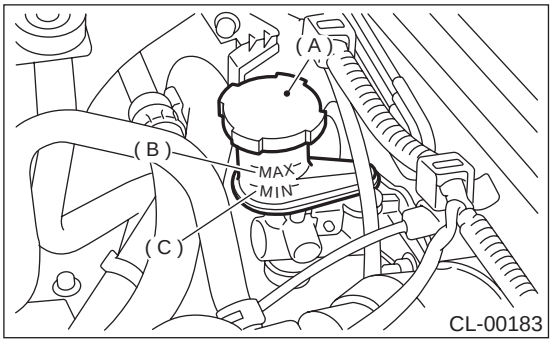

(A) Reservoir tank
(B) Maximum (MAX) level
(C) Maximum (MIN) level

B: REPLACEMENT

CAUTION:
• The FMVSS No. 116, fresh DOT3 or 4 brake fluid must be used.
• Cover bleeder with waste cloth, when loosening it, to prevent brake fluid from being splashed over surrounding parts.
• Avoid mixing different brands of brake fluid to prevent degrading the quality of the fluid.
• Be careful not to allow dirt or dust to get into the reservoir tank.

NOTE:
• During bleeding operation, keep the clutch reservoir tank filled with brake fluid to eliminate entry of air.
• Clutch pedal operating must be very slow.
• For convenience and safety, it is advisable to have two men working.
• The amount of brake fluid required is approximately 70 mℓ (2.4 US fl oz, 2.5 Imp fl oz) for total clutch system.

1) Remove air cleaner case. (Non-Turbo model)
<Ref. to IN(H4SO)-6, REMOVAL, Air Cleaner Case.>
2) Remove intercooler. (Turbo model)
<Ref. to IN(H4DOSTC)-13, REMOVAL, Intercooler.>
3) Draw out the brake fluid from reservoir tank with syringe.
4) Refill reservoir tank with recommended brake fluid.

Recommended brake fluid:
FMVSS No. 116, fresh DOT3 or 4 brake fluid

5) Drain fluid in the same method as the air bleeding.
6) Refill brake fluid before reservoir tank becomes empty, and drain contaminated fluid again.
7) Repeat the above procedure until the contaminated fluid is completely drained.

9. Clutch Fluid Air Bleeding

A: PROCEDURE

1. NON-TURBO MODEL

NOTE:
Bleed air from oil line with the help of a co-worker.

1) Remove air cleaner case.
<Ref. to IN(H4SO)-6, REMOVAL, Air Cleaner Case.>
2) Fit one end of a vinyl tube into the air bleeder of operating cylinder and put the other end into a brake fluid container.

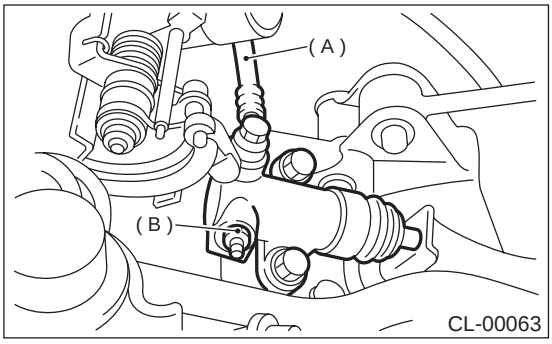

(A) Clutch hose
(B) Air bleeder

3) Slowly depress the clutch pedal and keep it depressed. Then open the air bleeder to discharge air together with the fluid.
Release the air bleeder for 1 or 2 seconds. Next, with the bleeder closed, slowly release the clutch pedal.

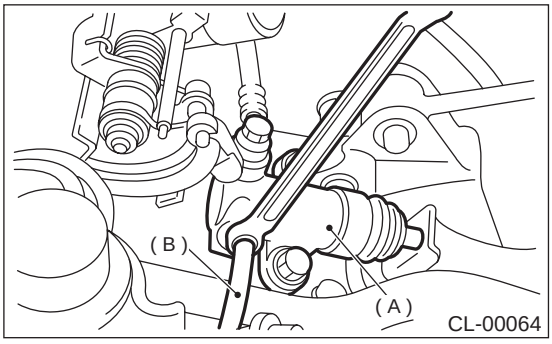

(A) Operating cylinder
(B) Vinyl tube

4) Repeat these steps until there are no more air bubbles in the vinyl tube.

CAUTION:
Cover bleeder with waste cloth when loosening it, to prevent brake fluid from being splashed over surrounding parts.

NOTE:
During bleeding operation, keep the clutch reservoir tank filled with brake fluid to eliminate entry of air.

5) Tighten air bleeder.

Tightening torque:
T: 8 N·m (0.8 kgf-m, 5.8 ft-lb)

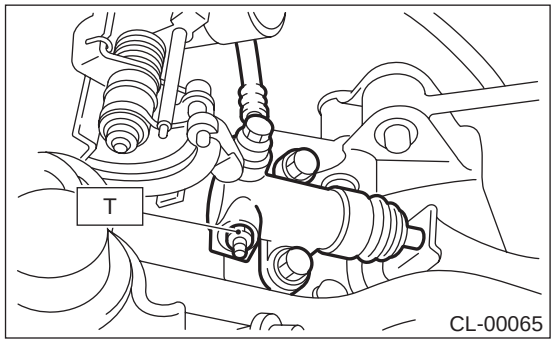

6) Check the fluid level. <Ref. to CL-30, INSPECTION, Clutch Fluid.>
7) After depressing the clutch pedal, make sure that there are no leaks evident in the entire system.
8) After bleeding air from system, ensure that clutch operates properly.
9) Install air cleaner case. <Ref. to IN(H4SO)-6, REMOVAL, Air Cleaner Case.>

2. TURBO MODEL

NOTE:
Bleed air from the oil line with help of a co-worker.

1) Remove the intercooler. <Ref. to IN(H4DOSTC)-13, REMOVAL, Intercooler.>
2) Remove the operating cylinder.

NOTE:
Do not remove the clutch hose.

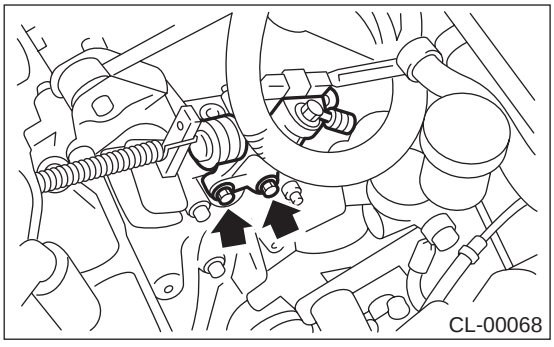

3) Fix the piston with clamp to avoid the piston from jumping out of cylinder.

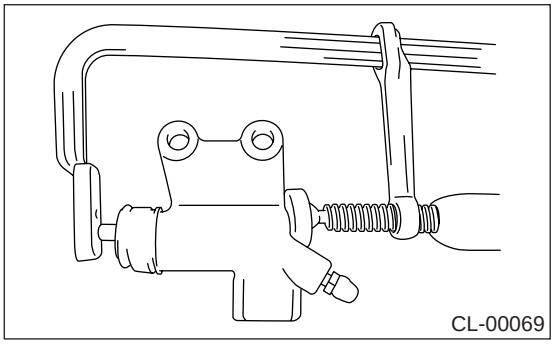

4) Fit one end of a vinyl tube into the air bleeder of operating cylinder and put the other end into a brake fluid container.
5) Slowly depress the clutch pedal and keep it depressed. Then open the air bleeder to discharge air together with the fluid.
Release the air bleeder for 1 or 2 seconds. Next, with the bleeder closed, slowly release the clutch pedal.

NOTE:
Set the air breather part higher than tip of operating cylinder when performing this procedure.

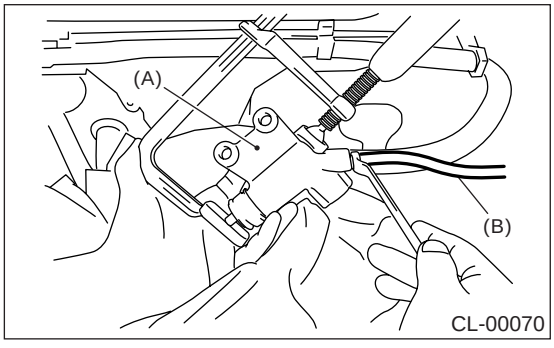

(A) Operating cylinder
(B) Vinyl tube

6) Repeat these steps until there are no more air bubbles in the vinyl tube.

CAUTION:
Cover the bleeder with waste cloth when loosening it, to prevent brake fluid from being splashed over surrounding parts.

7) Tighten the air bleeder.

Tightening torque:
T: 8 N·m (0.8 kgf-m, 5.8 ft-lb)

8) Install the operation clylinder.

Tightening torque:
T: 37 N·m (3.8 kgf-m, 27.5 ft-lb)

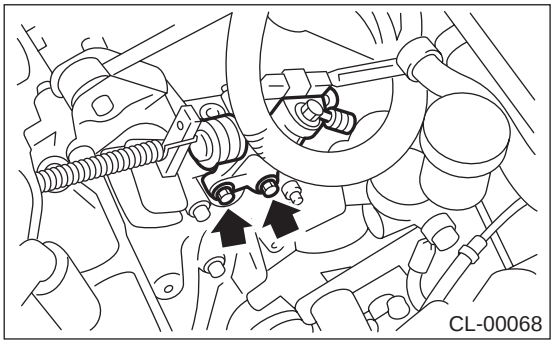

9) After depressing the clutch pedal, make sure that there are no leaks evident in the entire system.
10) After bleeding air from the system, ensure that the clutch operates properly.
11) Install the intercooler. <Ref. to IN(H4DOSTC)-14, INSTALLATION, Intercooler.>

10.Clutch Pedal

A: REMOVAL

1. LHD MODEL

1) Remove steering column. <Ref. to PS-28, REMOVAL, Tilt Steering Column.>
2) Disconnect connectors from stop light and clutch switches.
3) Remove snap pins which secure lever to push rod and operating rod.
4) Remove clevis pins which secure lever to push rod and operating rod.

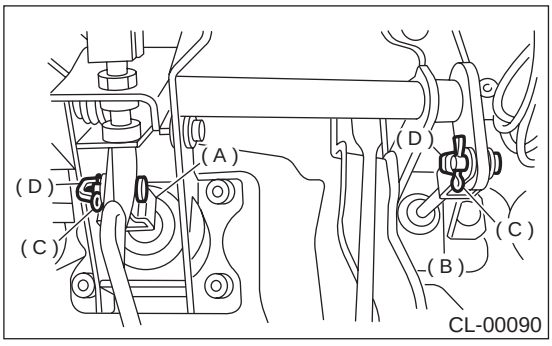

(A) Operating rod
(B) Push rod
(C) Snap pin
(D) Clevis pin

5) Remove PHV adjusting nut and lock nut.

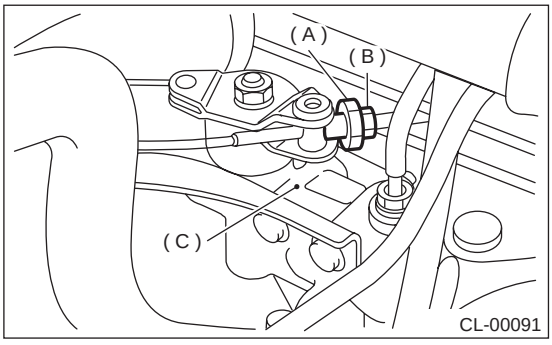

(A) Adjusting nut
(B) Lock nut
(C) PHV

6) Remove cable clamp, and disconnect PHV cable from PHV.

NOTE:
Carefully protect boot and inner cable from damage when disconnecting PHV cable.

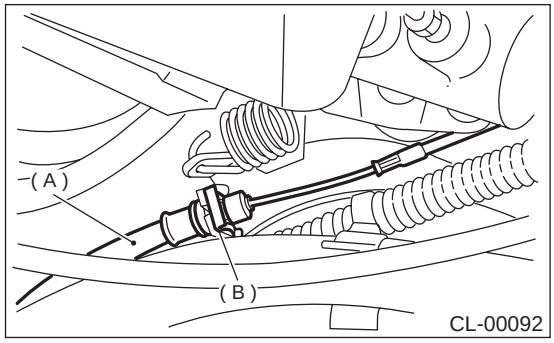

(A) PHV cable
(B) Clamp

7) Remove nut which secures clutch master cylinder.

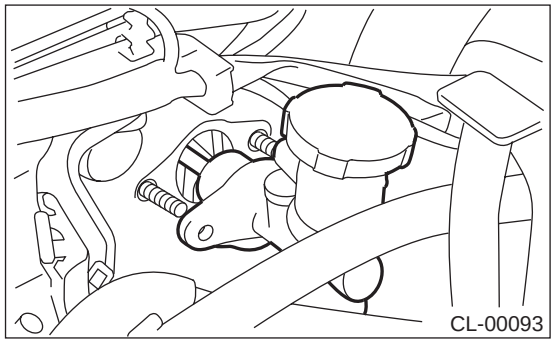

8) Remove bolts and nuts which secure brake and clutch pedals, and remove pedal assembly.

2. RHD MODEL

1) Disconnect ground cable from battery.
2) Remove lower cover under the stering wheel.
3) Disconnect connector from clutch. (With cruise control)
4) Remove snap pin and clevis pin that join push rod and clutch pedal.

5) Remove master cylinder mounting nuts.

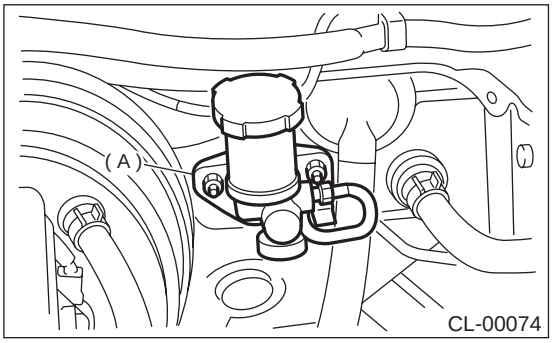

(A) Master cylinder

6) Remove PHV adjusting nut and lock nut. (Non-Turbo model)

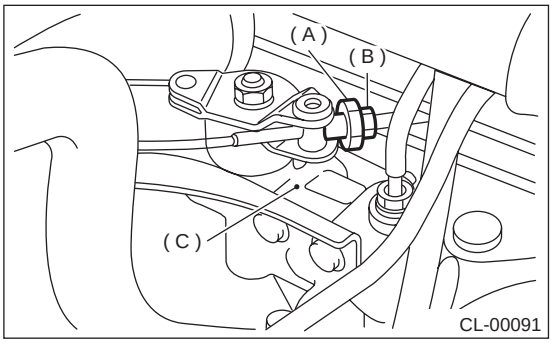

(A) Adjusting nut
(B) Lock nut
(C) PHV

7) Remove cable clamp and disconnect PHV cable from PHV.

NOTE:
Carefully protect boot and inner cable from damage when disconnecting PHV cable.

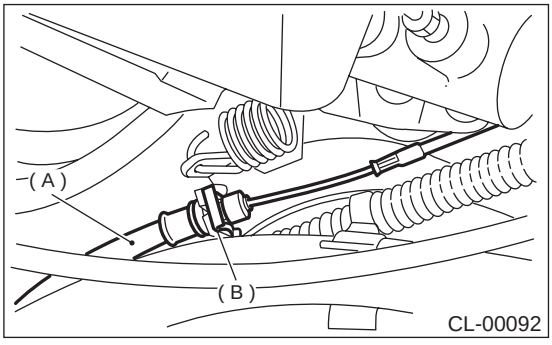

(A) PHV cable
(B) Clamp

8) Remove clutch pedal and bracket as a unit.

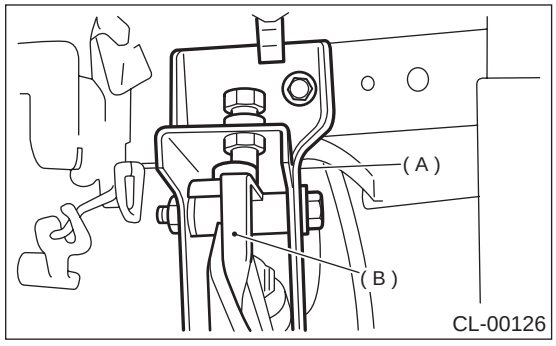

(A) Clutch pedal bracket
(B) Clutch pedal

B: INSTALLATION

1) Install in the reverse order of removal.

NOTE:
- If cable clamp is damaged, replace it with a new one.
- Never fail to cover outer cable end with boot.
- Be careful not to kink accelerator cable.
- Always use new clevis pins.

2) Adjust clutch pedal. <Ref. to CL-37, ADJUSTMENT, Clutch Pedal.>
3) Adjust hill holder. (Non-Turbo model) <Ref. to BR-49, ADJUSTMENT, Hill Holder.>

C: DISASSEMBLY

1. LHD MODEL

1) Remove clutch switches.
2) Remove clips, assist spring, rod and bushing.

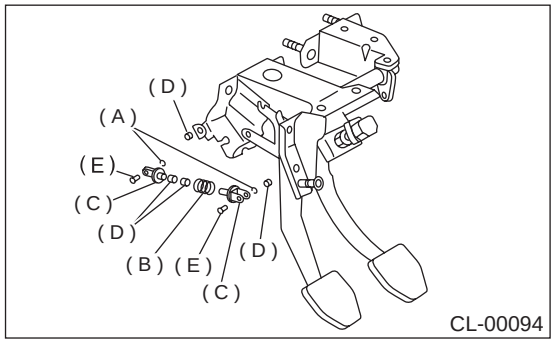

(A) Clip
(B) Assist spring
(C) Assist rod
(D) Bushing
(E) Clevis pin

3) Remove spring pin and lever.

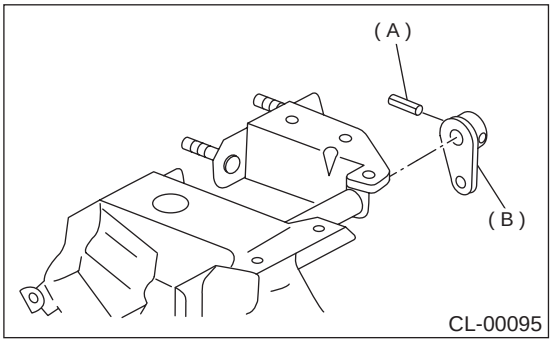

(A) Pin
(B) Lever

4) Remove clutch pedal and bushings.

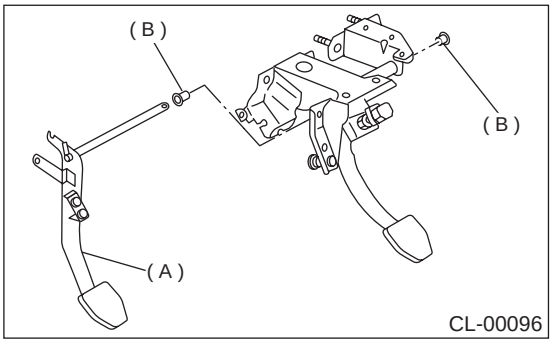

(A) Clutch pedal
(B) Bushing

5) Remove stopper, clip, O-ring, rod S, and then remove spring and bushing S.

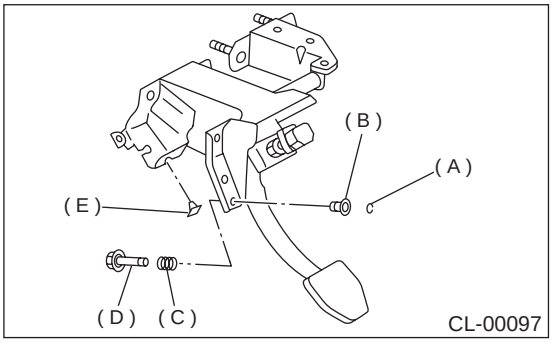

(A) Clip (If equipped)
(B) Bushing S (If equipped)
(C) Spring S (If equipped)
(D) Rod S (If equipped)
(E) Stopper

6) Remove stoppers from clutch pedal.
7) Remove clutch pedal pad.

2. RHD MODEL

1) Remove clutch switch.
2) Remove clip, pull out clevis pin.

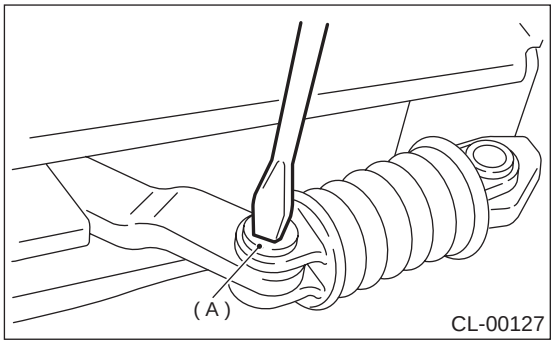

(A) Clevis pin

3) Remove assist rod, spring and bushing.
4) Remove clutch pedal from clutch pedal bracket.

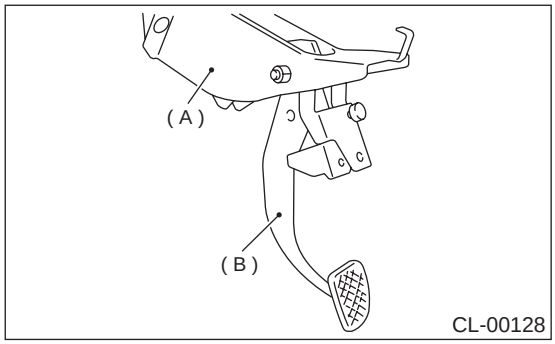

(A) Clutch pedal bracket
(B) Clutch pedal

5) Remove following parts (B to G) from clutch pedal bracket (A) as shown in figure.

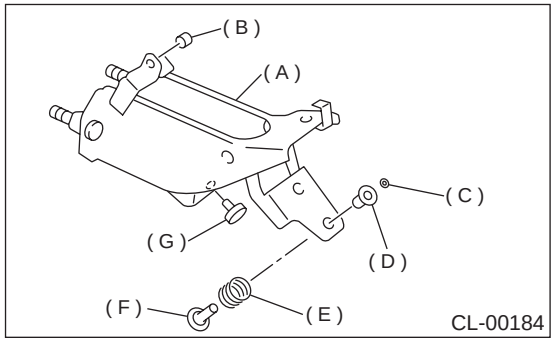

(A) Clutch pedal bracket
(B) Bushing C
(C) Clip (If equipped)
(D) Bushing S (If equipped)
(E) Spring S (If equipped)
(F) Rod S (If equipped)
(G) Bushing

6) Remove spacer, bushing and pedal pad from clutch pedal.

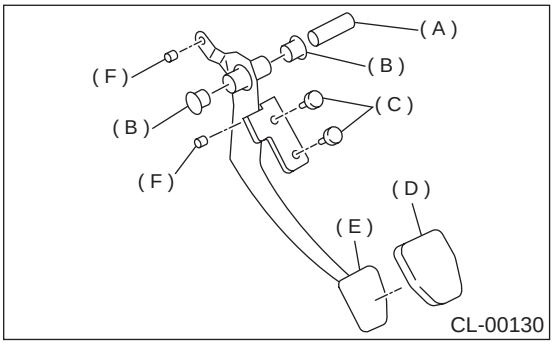

(A) Spacer
(B) Bushing
(C) Bushing
(D) Pedal pad
(E) Clutch pedal
(F) Bushing C

D: ASSEMBLY

1. LHD MODEL

1) Attach clutch switch, etc. to pedal bracket temporarily.
2) Clean inside of bores of clutch pedal and brake pedal, apply grease, and set bushings into bores.
3) Align bores of pedal bracket, clutch pedal and brake pedal, attach brake pedal return spring, assist rods, and spring, and bushing.

NOTE:
Clean up inside of bushings and apply grease before installing spacer.

4) Install hill holder cable to the clutch pedal. (Vehicle with hill holder)

2. RHD MODEL

1) Clean and apply grease to hole of sliding portion between clutch pedal and bushing.
2) Install pad, stopper, bushing C, spacer and bushing to clutch pedal.
3) Install rod S, spring S, bushing S, clip, bushing, clutch switch and bushing C to clutch pedal bracket.
4) Install clutch pedal to pedal bracket.

Tightening torque:
T: 29 N·m (3.0 kgf-m, 21.7 ft-lb)

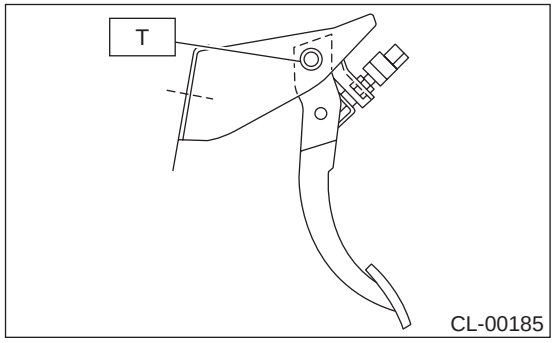

5) Install assist rod, bushing and assist spring to clutch pedal and pedal bracket.
6) Install PHV cable to clutch pedal. (Vehicle with hill holder).

E: INSPECTION

1. CLUTCH PEDAL

Move clutch pedal pads in the lateral direction with a force of approximately 10 N (1 kgf, 2 lb) to ensure pedal deflection is in specified range.
If excessive deflection is noted, replace bushings with new ones.

Deflection of clutch pedal:
Service limit
5.0 mm (0.197 in) or less

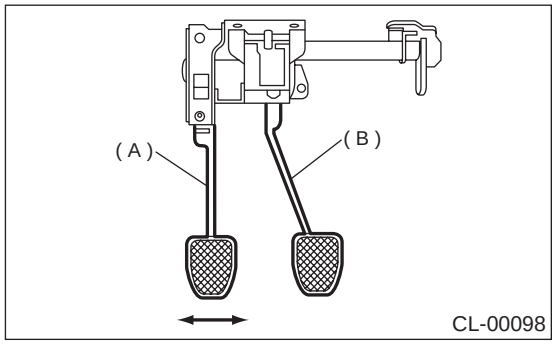

(A) Clutch pedal
(B) Brake pedal

F: ADJUSTMENT

1. LHD MODEL

1) Measure the full stroke amount of clutch pedal.

NOTE:
- Measure the length between seat cushion front end and center portion of clutch pedal.
- Slide the seat at seventh notch from first notch.

Specified clutch pedal full stroke: A
130 — 135 mm (5.12 — 5.31 in)

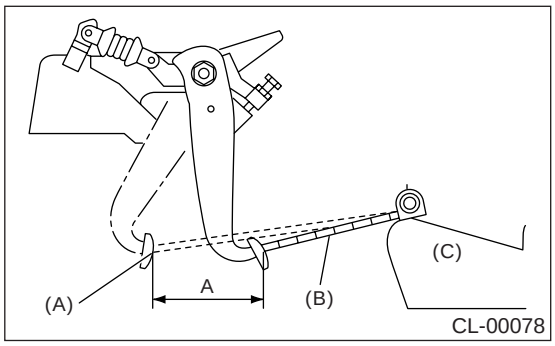

(A) Clutch (Ful stroke condition)
(B) Scale
(C) Seat

2) If not as specified, loosen the clutch stopper nut to adjust it.

Tightening torque (Clutch stopper nut):
8 N·m (0.8 kgf-m, 5.8 ft-lb)

3) Loosen the push rod lock nut.

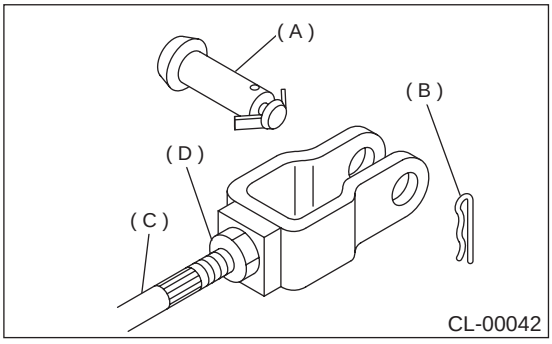

(A) Clevis pin
(B) Snap pin
(C) Push rod
(D) Push rod lock nut

4) Turn the push rod to adjust.
(1) Ensure that the clutch pedal contacts stopper bolt, when releasing the clutch pedal.
(2) Ensure that the clutch pedal contacts clutch pedal bracket stopper, when fully depressing the clutch pedal.

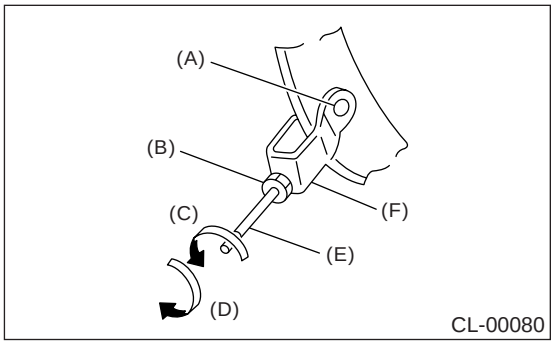

(A) Clevis hole
(B) Push rod lock nut
(C) Lengthening direction
(D) Shortening direction
(E) Push rod
(F) U shaped bracket

5) Turn the push rod clockwise to shorten until clearance is made at stopper bolt or clutch switch.
- Without cruise control

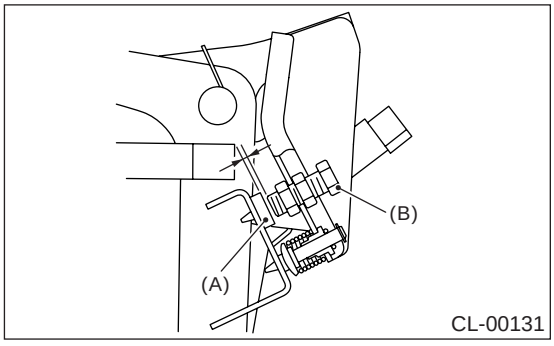

(A) Stoper
(B) Stopper bolt

- With cruise control

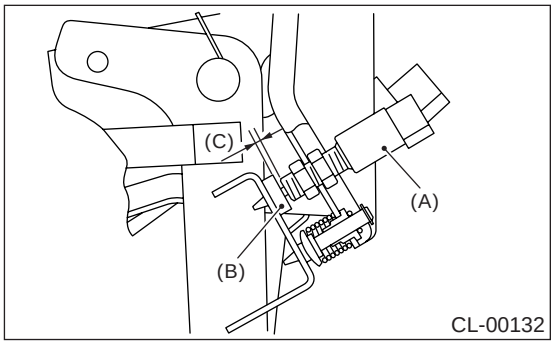

(A) Clutch switch
(B) Stopper
(C) Clearance

6) Turn the push rod counter clockwise to lengthen until clutch pedal contacts to stopper bolt or clutch switch.
7) Turn the push rod further 270× counterclockwise to lengthen (arrow direction as shown in the figure).

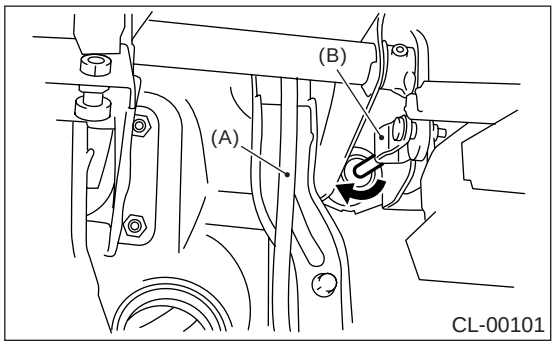

(A) Accelerator pedal
(B) Clevis

8) Move the clevis pin in lateral direction to ensure it moves smoothly.
9) Tighten the push rod lock nut.

Tightening torque (Clutch stopper nut):
10 N·m (1.0 kgf-m, 7.2 ft-lb)

10) Measure the full stroke amount of clutch pedal again.

Specified clutch pedal full stroke: A
130 — 135 mm (5.12 — 5.31 in)

11) Install the clutch switch. <Ref. to CL-40, INSTALLATION, Clutch Switch.>

2. RHD MODEL

1) Measure the full stroke amount of clutch pedal.

NOTE:
- Measure the length between seat cushion front end and center portion of clutch pedal.
- Slide the seat at seventh notch from first notch.

Specified clutch pedal full stroke: A
130 — 135 mm (5.12 — 5.31 in)

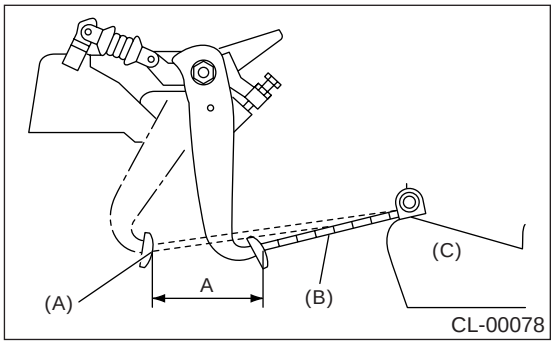

(A) Clutch (Ful stroke condition)
(B) Scale
(C) Seat

2) If not as specified, adjust it with stopper bolt or clutch switch.

Tightening torque (Clutch stopper nut):
8 N·m (0.8 kgf-m, 5.8 ft-lb)

3) Loosen the push rod lock nut.

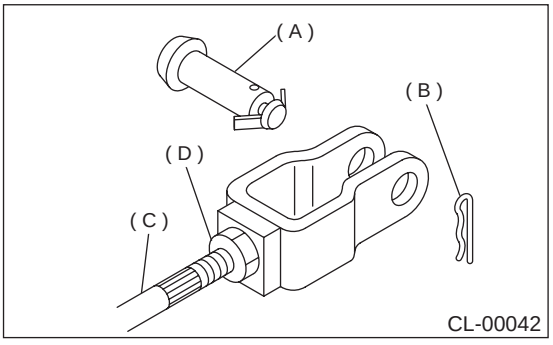

(A) Clevis pin
(B) Snap pin
(C) Push rod
(D) Push rod lock nut

4) Turn the push rod to adjust.
(1) Ensure that the clutch pedal contacts stopper bolt, when releasing the clutch pedal.

(2) Ensure that the clutch pedal contacts clutch pedal bracket stopper, when fully depressing the clutch pedal.

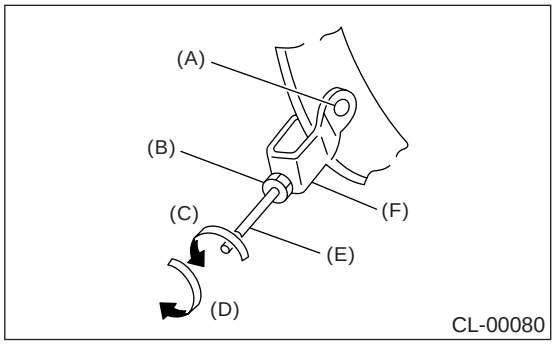

(A) Clevis hole
(B) Push rod lock nut
(C) Lengthening direction
(D) Shortening direction
(E) Push rod
(F) U shaped bracket

5) Turn the push rod clockwise to shorten until clearance is made at stopper bolt or clutch switch.

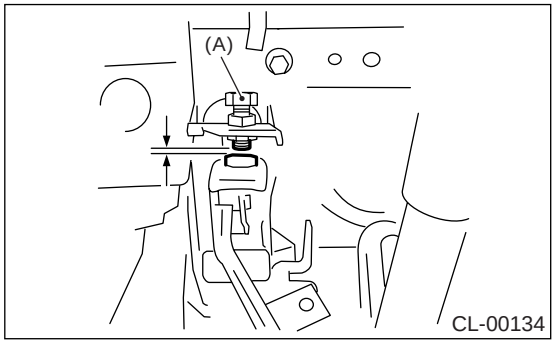

(A) Stopper bolt

6) Turn the push rod counter clockwise to lengthen until clutch pedal contacts to stopper bolt or clutch switch.
7) Turn the push rod further 270× counterclockwise to lengthen (arrow direction as shown in the figure).

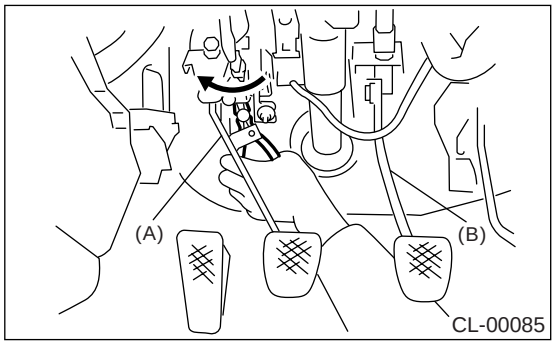

(A) Clutch pedal
(B) Brake pedal

8) Move the clevis pin in lateral direction to ensure it moves smoothly.
9) Tighten the push rod lock nut.

Tightening torque (Clutch stopper nut):
10 N·m (1.0 kgf-m, 7.2 ft-lb)

10) Measure the full stroke amount of clutch pedal again.

Specified clutch pedal full stroke: A
130 — 135 mm (5.12 — 5.31 in)

11) Install the clutch switch. <Ref. to CL-40, INSTALLATION, Clutch Switch.>

11.Clutch Switch

A: REMOVAL

1) Disconnect the ground cable from battery.
2) Remove the instrument panel lower cover.
3) Disconnect the connector from clutch start switch.

B: INSTALLATION

1) Install the clutch switch and clutch pedal stopper so that the gap between them is 0 mm (0 in).

Tightening torque:
8 N·m (0.8 kgf-m, 5.8 ft-lb)

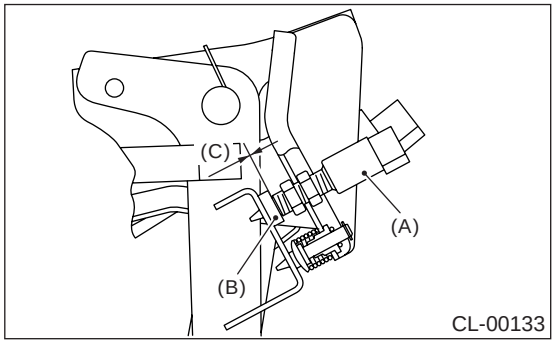

(A) Clutch switch
(B) Stopper
(C) 0 mm (0 in)

2) Measure stroke of clutch pedal.

Specified clutch pedal full stroke: A
130 — 135 mm (5.12 — 5.31 in)

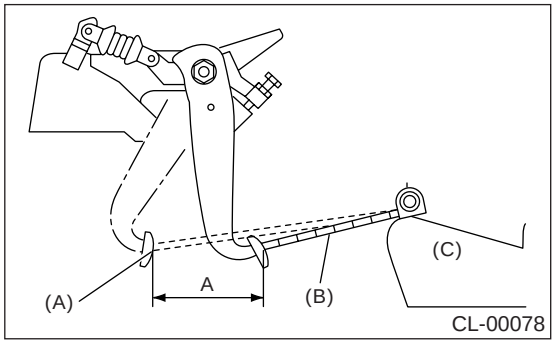

3) If the clutch pedal stroke is out of specification, adjust the stroke.<Ref. to CL-37, ADJUSTMENT, Clutch Pedal.>
4) Connect clutch switch connector.

C: INSPECTION

1) Check the clutch switch continuity. If continuity is not as specified, replace the switch.
(1) Disconnect the clutch switch connector.
(2) Measure the resistance between 1 and 2 of switch terminal.
3) Check clutch switch continuity. If continuity is not as specified, replace the switch.
(1) Disconnect the clutch switch connector.
(2) Measure the resistance between 1 and 2 of switch terminal.

Terminals/Specified resistance
When clutch pedal depressed:
1 — 2/Less than 1Ω

Terminals / Specified resistance
When clutch pedal not depressed:
1 — 2/More than 1 MΩ

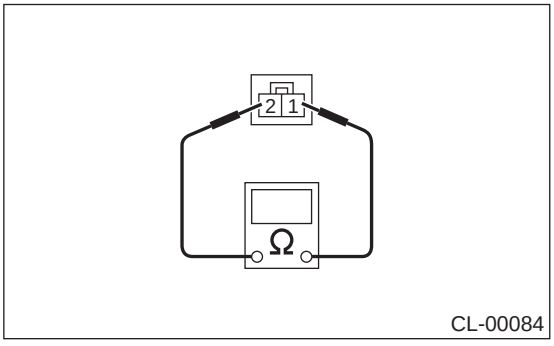

D: ADJUSTMENT

Refer to “ADJUSTMENT” for clutch pedal. <Ref. to CL-37, ADJUSTMENT, Clutch Pedal.>

12.General Diagnostic Table

A: INSPECTION

1. CLUTCH

Symptom	Possible cause	Corrective
1. Clutch slippage. It is hard to perceive clutch slippage in the early stage, but pay attention to the following symptoms • Engine speed up when shifting. • High speed driving is impossible; especially rapid acceleration impossible and vehicle speed does not increase in proportion to an increase in engine speed. • Power falls, particularly when ascending a slope, and there is a smell of burning of the clutch facing. • Method of testing: Put the vehicle in stationary condition with parking brake fully applied. Disengage the clutch and shift the transmission gear into the first. Gradually allow the clutch to engage while gradually increasing the engine speed. The clutch function is satisfactory if the engine stalls. However, the clutch is slipping if the vehicle does not start off and the engine does not stall.	(a) Clutch facing smeared by oil	Replace.
	(b) Worn clutch facing	Replace.
	(c) Deteriorated diaphragm spring	Replace.
	(d) Distorted pressure plate or flywheel	Correct or replace.
	(e) Defective release bearing holder	Correct or replace.
2. Clutch drags. As a symptom of this trouble, a harsh scratching noise develops and control becomes quite difficult when shifting gears. The symptom becomes more apparent when shifting into the first gear. However, because much trouble of this sort is due to defective synchronization mechanism, carry out the test as described after. • Method of testing: <Ref. to CL-42, DIAGNOSTIC DIAGRAM OF CLUTCH DRAG, INSPECTION, General Diagnostic Table.> It may be judged as insufficient disengagement of clutch if any noise occurs during this test.	(a) Worn or rusty clutch disc hub spline	Replace clutch disc.
	(b) Excessive deflection of clutch disc facing	Correct or replace.
	(c) Seized crankshaft pilot needle bearing	Replace.
	(d) Cracked clutch disc facing	Replace.
	(e) Sticked clutch disc (smeared by oil or water)	Replace.
3. Clutch chatters. Clutch chattering is an unpleasant vibration to the whole body when the vehicle is just started with clutch partially engaged.	(a) Adhesion of oil on the facing	Replace clutch disc.
	(b) Weak or broken torsion spring	Replace clutch disc.
	(c) Defective facing contact or excessive disc	Replace clutch disc defection.
	(d) Warped pressure plate or flywheel	Correct or replace.
	(e) Loose disc rivets	Replace clutch disc.
	(f) Loose engine mounting	Retighten or replace mounting.
	(g) Faulty pitching stopper	Replace.
4. Noisy clutch Examine whether the noise is generated when the clutch is disengaged, engaged, or partially engaged.	(a) Broken, worn or unlubricated release bearing	Replace release bearing.
	(b) Insufficient lubrication of pilot bearing	Apply grease.
	(c) Loose clutch disc hub	Replace clutch disc.
	(d) Loose torsion spring retainer	Replace clutch disc.
	(e) Deteriorated or broken torsion spring	Replace clutch disc.

Symptom	Possible cause	Corrective
5. Clutch grabs. When starting the vehicle with the clutch partially engaged, the clutch engages suddenly and the vehicle jumps instead of making a smooth start.	(a) Grease or oil on facing	Replace clutch disc.
	(b) Deteriorated cushioning spring	Replace clutch disc.
	(c) Worn or rusted spline of clutch disc or main shaft	Take off rust, apply grease or replace clutch disc or main shaft.
	(d) Deteriorated or broken torsion spring	Replace clutch disc.
	(e) Loose engine mounting	Retighten or replace mounting.
	(f) Deteriorated diaphragm spring	Replace.

2. CLUTCH PEDAL

Trouble	Corrective action
Insufficient pedal play	Adjust pedal play.
Clutch pedal free play insufficient	Adjust pedal free play.
Excessively worn and damaged pedal shaft and/or bushing	Replace bushing and/or shaft with new one.

3. DIAGNOSTIC DIAGRAM OF CLUTCH DRAG

Step		Value	Yes	No
1	**CHECK GEAR NOISE.** 1) Start the engine. 2) Disengage the clutch and shift quickly from neutral to reverse in idling condition.	Is an abnormal noise heard from the transmission gears?	Go to step **2.**	Clutch is normal.
2	**CHECK GEAR NOISE.** With the engine idling, disengage the clutch and shift quickly (between 0.5 to 1.0 s) from neutral to reverse.	Is an abnormal noise heard from the transmission gears?	Go to step **3.**	Defective transmission or excessive clutch drag torque. Inspect pilot bearing, clutch disc, transmission and clutch disc hub spline.
3	**CHECK GEAR NOISE.** With the engine idling, disengage the clutch and shift quickly (between 0.5 to 1.0 s) from neutral to reverse shift repeatedly between neutral and reverse with clutch disengaged.	Is an abnormal noise heard from the transmission gears?	Clutch is not disengaged properly. Inspect clutch disc, clutch cover, clutch release system, and clutch pedal free play.	Clutch disc and flywheel are locked together. Inspect clutch disc and clutch disc hub spline.