BODY SECTION

This service manual has been prepared to provide SUBARU service personnel with the necessary information and data for the correct maintenance and repair of SUBARU vehicles.
This manual includes the procedures for maintenance, disassembling, reassembling, inspection and adjustment of components and diagnostics for guidance of experienced mechanics.
Please peruse and utilize this manual fully to ensure complete repair work for satisfying our customers by keeping their vehicle in optimum condition. When replacement of parts during repair work is needed, be sure to use SUBARU genuine parts.

All information, illustration and specifications contained in this manual are based on the latest product information available at the time of publication approval.

HVAC SYSTEM (HEATER, VENTILATOR AND A/C)	AC
HVAC SYSTEM (DIAGNOSTICS)	AC
AIRBAG SYSTEM	AB
AIRBAG SYSTEM (DIAGNOSTICS)	AB
SEAT BELT SYSTEM	SB
LIGHTING SYSTEM	LI
WIPER AND WASHER SYSTEMS	WW
ENTERTAINMENT	ET
COMMUNICATION SYSTEM	COM
GLASS/WINDOWS/MIRRORS	GW
BODY STRUCTURE	BS
INSTRUMENTATION/DRIVER INFO	IDI
SEATS	SE
SECURITY AND LOCKS	SL
SUNROOF/T-TOP/CONVERTIBLE TOP (SUNROOF)	SR
EXTERIOR/INTERIOR TRIM	EI
EXTERIOR BODY PANELS	EB

FUJI HEAVY INDUSTRIES LTD. G2300GE7

BODY SECTION

CRUISE CONTROL SYSTEM	CC
CRUISE CONTROL SYSTEM (DIAGNOSTICS)	CC
IMMOBILIZER (DIAGNOSTICS)	IM

SUNROOF/T-TOP/CONVERTIBLE TOP (SUNROOF)

SR

		Page
1.	General Description	2
2.	Sunroof Control System	5
3.	Sunroof Lid	6
4.	Sunroof Assembly	7
5.	Sunroof Motor	11
6.	Sunroof Switch	14

1. General Description

A: COMPONENT

1. SEDAN

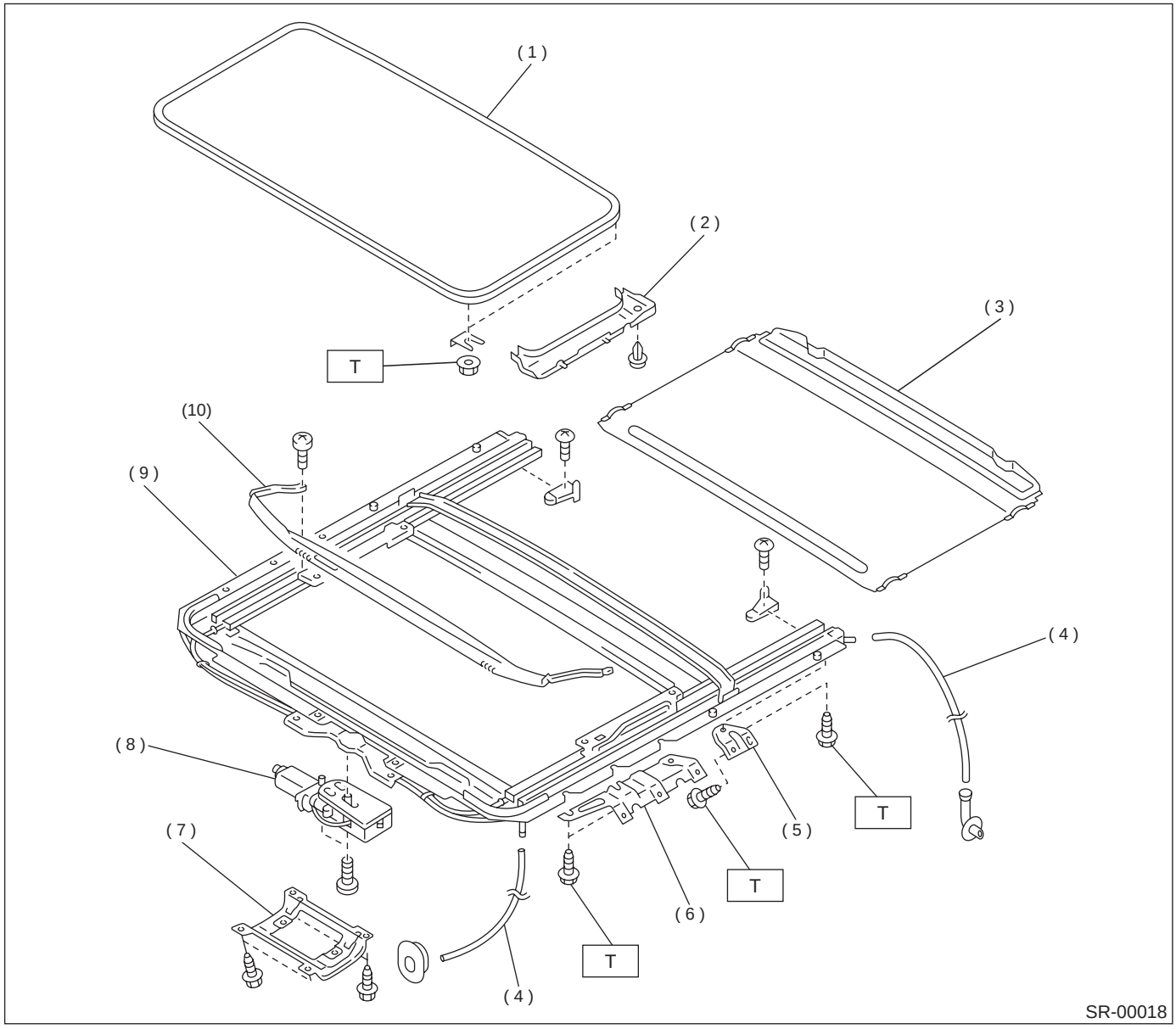

(1) Glass lid
(2) Guide rail cover
(3) Sunshade
(4) Drain tube
(5) Sunroof bracket (Rear)
(6) Sunroof bracket (Front)
(7) Motor cover
(8) Motor ASSY
(9) Frame ASSY
(10) Deflector

Tightening torque: N·m (kgf-m, ft-lb)
T: 7.4 (0.75, 5.4)

2. WAGON

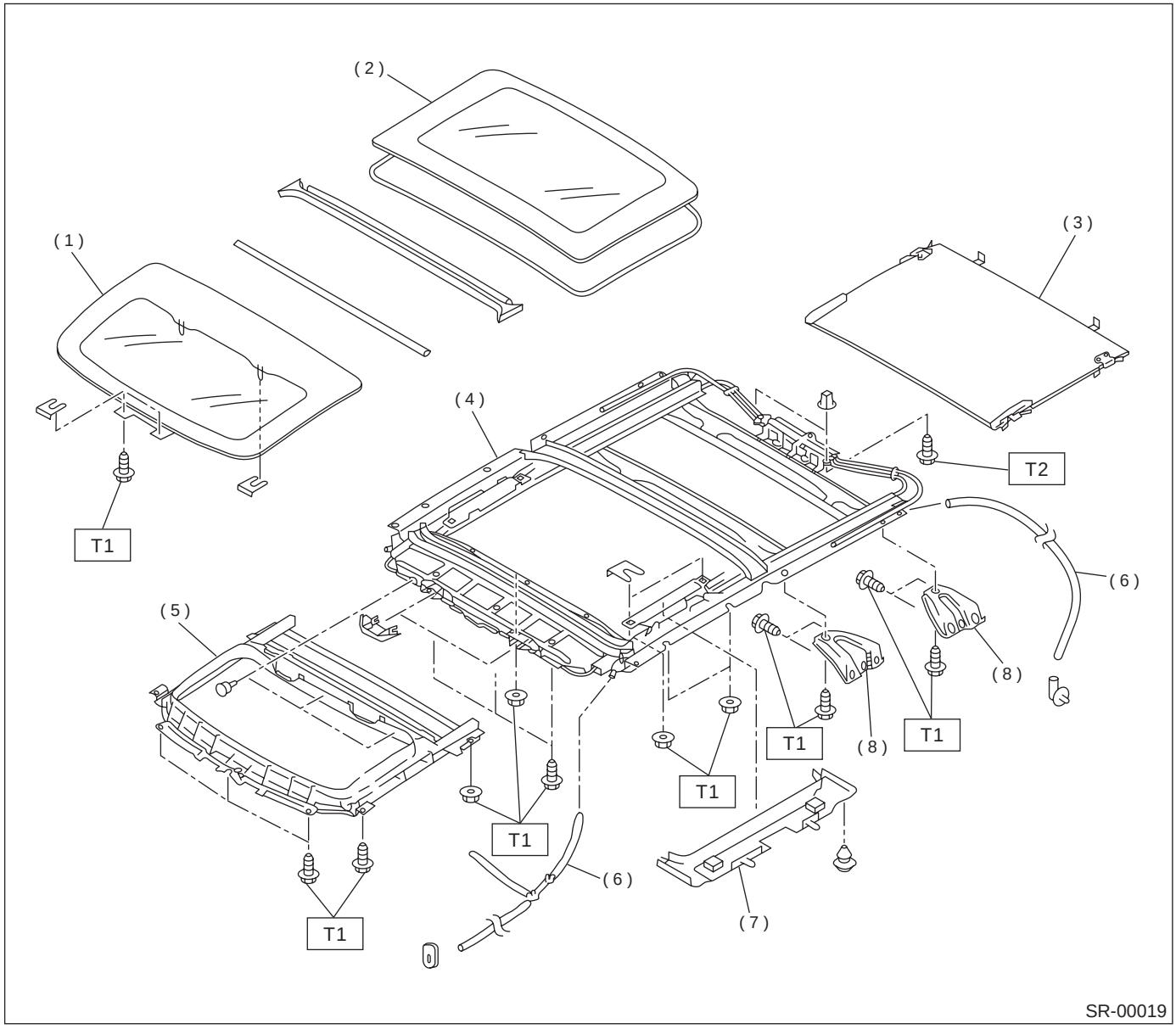

(1) Glass lid (Front)
(2) Glass lid (Rear)
(3) Sunshade
(4) Frame ASSY (Rear)
(5) Frame ASSY (Front)
(6) Drain tube
(7) Cover
(8) Frame bracket

Tightening torque: N·m (kgf-m, ft-lb)
T1: 7.4 (0.75, 5.4)
T2: 1.5 (0.15, 1.1)

B: CAUTION

- Before disassembling or reassembling parts, always disconnect battery ground cable. When replacing radio, control module, and other parts provided with memory functions, record memory contents before disconnecting the battery ground cable. Otherwise, the memory will be erased.
- Reassemble in reverse order of disassembly, unless otherwise indicated.
- Adjust parts to the given specifications.
- Connect connectors and hoses securely during reassembly.
- After reassembly, make sure all functional parts operate smoothly.

C: PREPARATION TOOL

1. GENERAL TOOLS

TOOL NAME	REMARKS
Circuit Tester	Used for measuring resistance and voltage.

2. Sunroof Control System

A: SCHEMATIC

1. SUNROOF

<Ref. to WI-306, SCHEMATIC, Sunroof System.>

B: INSPECTION

Symptom	Checking order
Water leaks.	(1) Check roof panel and sunroof lid for improper or poor sealing. (2) Check drain tube for clogging. (3) Check sunroof frame seal and body for improper fit.
Booming noise	(1) Check sunroof lid and roof panel for improper clearance. (2) Check sunshade and roof trim for improper clearance.
Abnormal motor noise	(1) Check motor for looseness. (2) Check gears and bearings for wear. (3) Check cables for wear. (4) Check cable pipe for deformities.
Failure of sunroof (Motor operates properly.)	(1) Check guide rail for foreign particles. (2) Check guide rail for improper installation. (3) Check parts for mutual interference. (4) Check cable slider for improper clinching. (5) Check cable for improper installation. (6) Check clutch adjustment nut for improper tightness.
Motor does not rotate or rotates improperly.	(1) Check fuse for blow-out. (2) Check switch for improper function. (3) Check motor for incorrect terminal voltage. (4) Check relay for improper operation. (5) Check poor grounding system. (6) Check harness for open or short and terminals for poor connections. (7) Check limit switch for improper operation.

3. Sunroof Lid

A: REMOVAL

1. WAGON (FRONT)

1) Tilt-up the front sunroof (most upper position).
2) Remove sunroof switch. <Ref. to SR-14, REMOVAL, Sunroof Switch.>
3) Remove two mounting bolts.
4) Detach covers (A) then remove two nuts from tilt-up assembly.

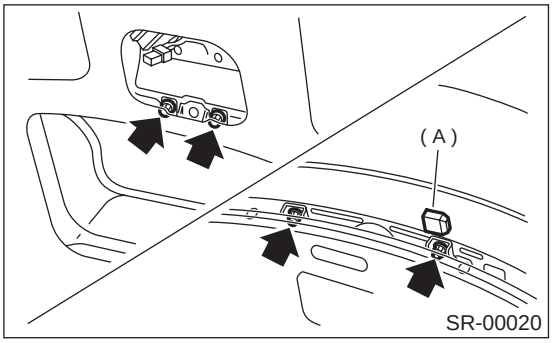

5) Remove the sunroof lid carefully.

2. SEDAN AND WAGON (REAR)

1) Completely close rear sunroof lid and open sunshade.
2) Remove covers (A) then remove nuts (B).

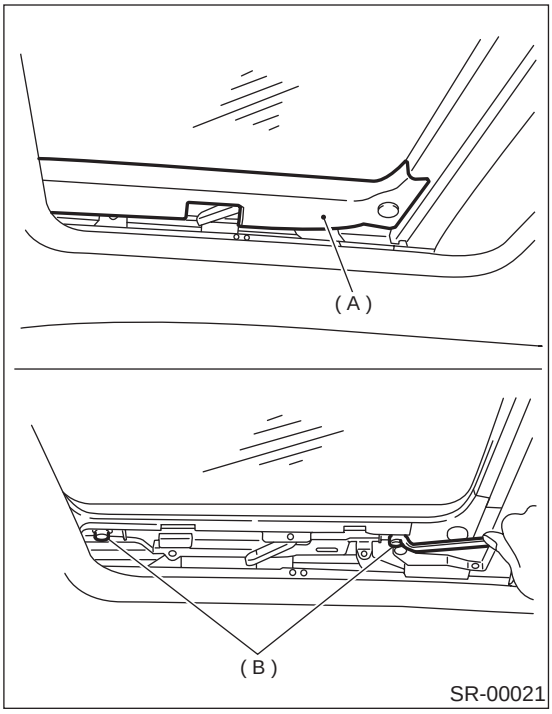

3) Remove the sunroof lid carefully.

B: INSTALLATION

Install in the reverse order of removal.

CAUTION:
When installing sunroof lid, be careful not to pinch the lip (A) of lid.

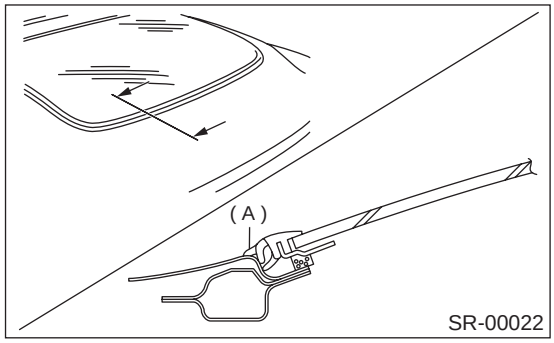

C: ADJUSTMENT

1. ALIGNMENT OF HEIGHT BETWEEN SUNROOF LID AND ROOF PANEL

Loosen sunroof lid installation nuts and then adjust height by adding (max: two pieces) or extracting (max: one piece) shims (B) (standard: one piece) between sunroof lid (A) and body.

Difference in height between sunroof lid and roof panel: L
L: 2.0±0.5 mm (0.079±0.020 in)

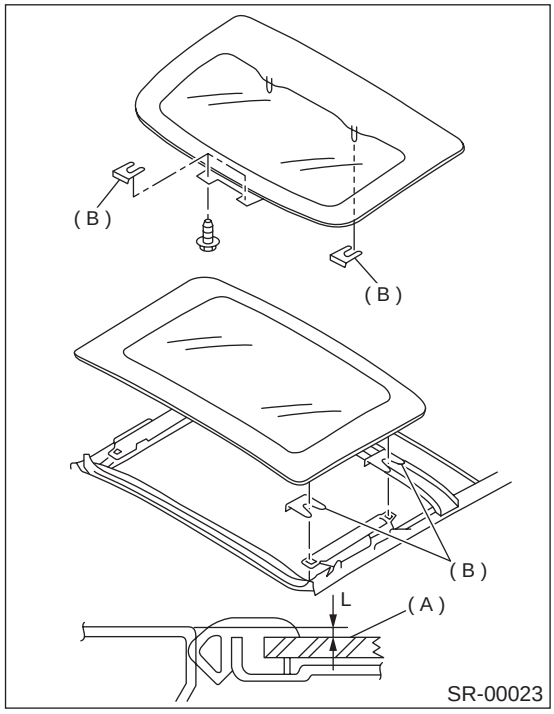

4. Sunroof Assembly

A: REMOVAL

1. SEDAN

1) Disconnect ground cable from battery.
2) Remove roof trim. <Ref. to EI-42, SEDAN, REMOVAL, Roof Trim.>
3) Remove sunroof lid. <Ref. to SR-6, SEDAN AND WAGON (REAR), REMOVAL, Sunroof Lid.>
4) Disconnect drain tubes from sunroof frame.
5) Remove room lamp harness clip (A).

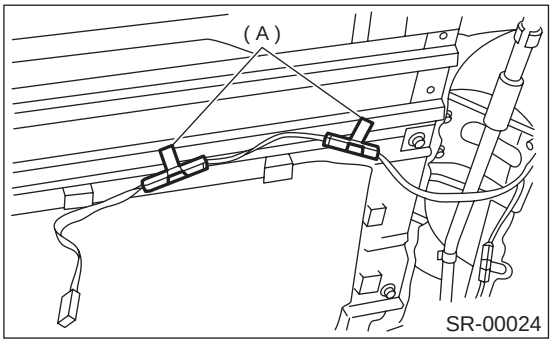

6) Disconnect sunroof harness connector.
7) Remove motor cover.

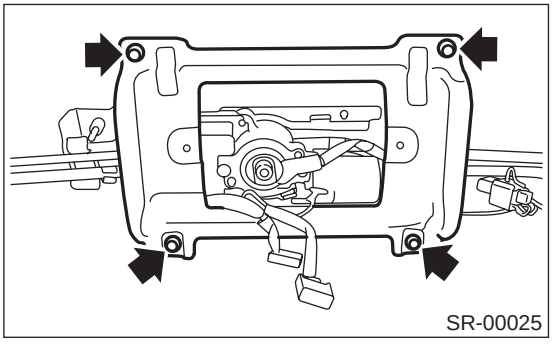

8) Remove sunroof brackets front (A) and rear (B).

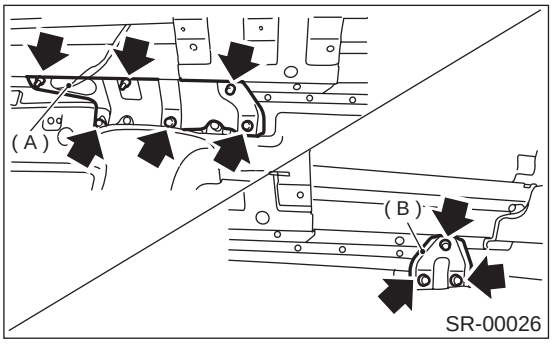

9) Remove nuts then detach the sunroof frame.

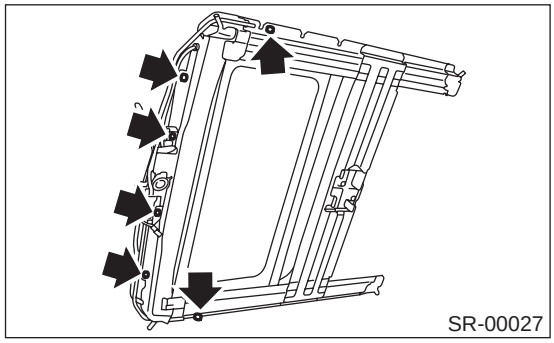

2. WAGON (FRONT)

1) Disconnect ground cable from battery.
2) Remove roof trim. <Ref. to EI-42, WAGON, REMOVAL, Roof Trim.>
3) Remove front sunroof lid. <Ref. to SR-6, WAGON (FRONT), REMOVAL, Sunroof Lid.>
4) Remove room lamp harness clip.
5) Remove bolts (A), nuts (B) and clips (C) then detach the sunroof frame.

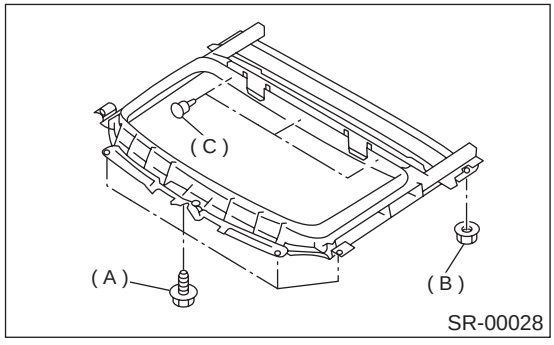

3. WAGON (REAR)

1) Disconnect ground cable from battery.
2) Remove roof trim. <Ref. to EI-42, WAGON, REMOVAL, Roof Trim.>
3) Remove rear sunroof lid. <Ref. to SR-6, SEDAN AND WAGON (REAR), REMOVAL, Sunroof Lid.>
4) Disconnect drain tubes (A) from rear sunroof frame.
5) Disconnect sunroof harness connector (B).
6) Remove sunroof brackets (C).
7) Remove bolts (D) and nuts (E) then detach the sunroof frame.

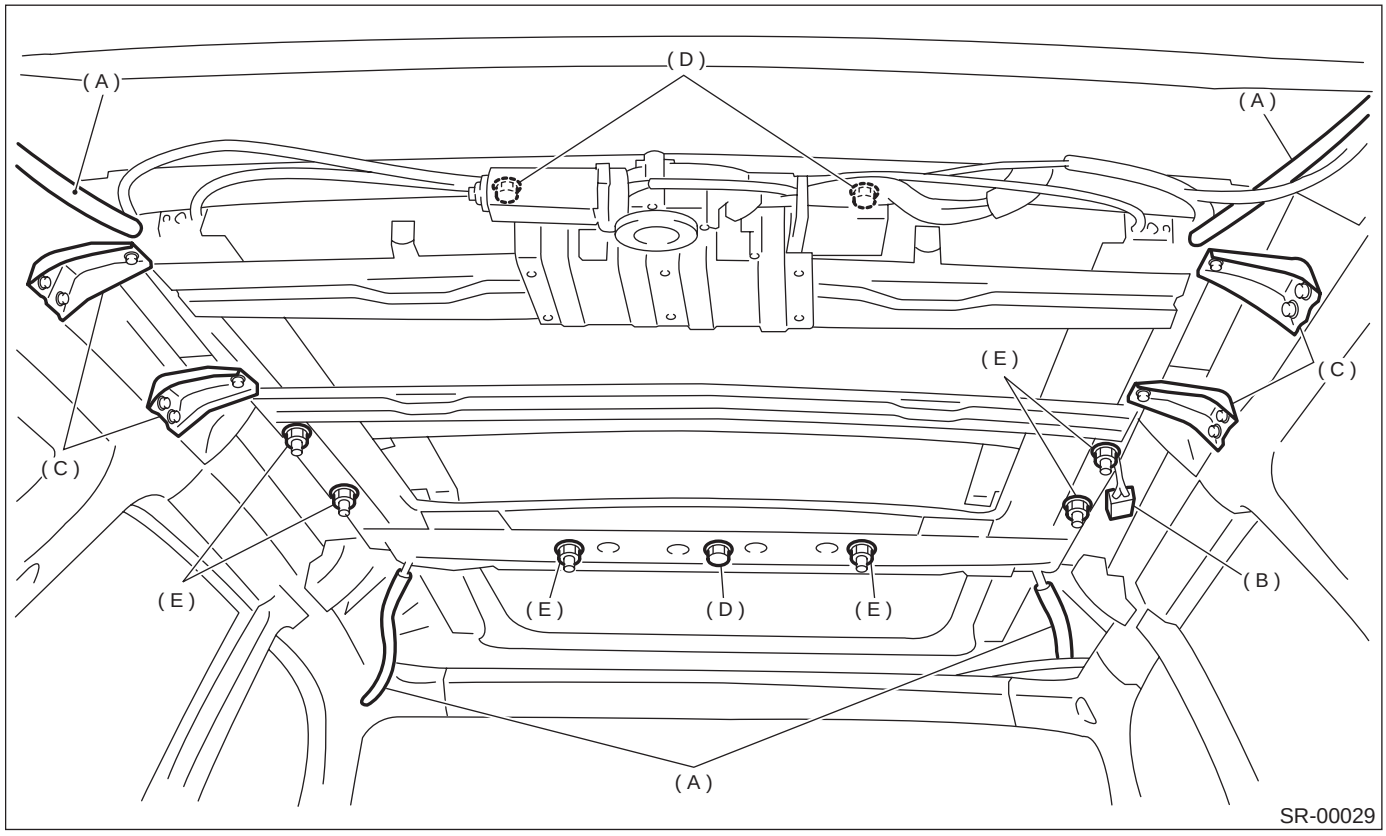

B: INSTALLATION

Install in the reverse order of removal.

CAUTION:
Be careful not to snag the harness.

NOTE:
- Make sure to connect harness connector.
- When installing drain tube, insert it securely onto drain pipe.

Length A:
15 mm (0.59 in) or more

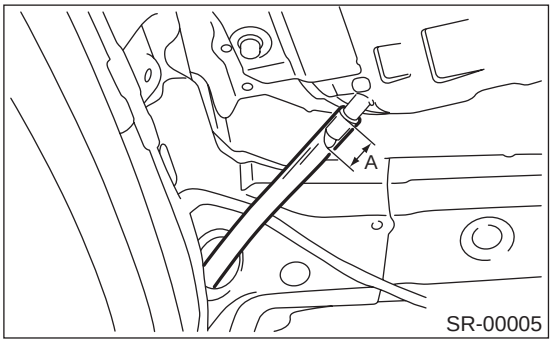

C: DISASSEMBLY

1. SEDAN AND WAGON (FRONT)

1) Remove sunroof frame.
2) Remove rail stoppers (A).

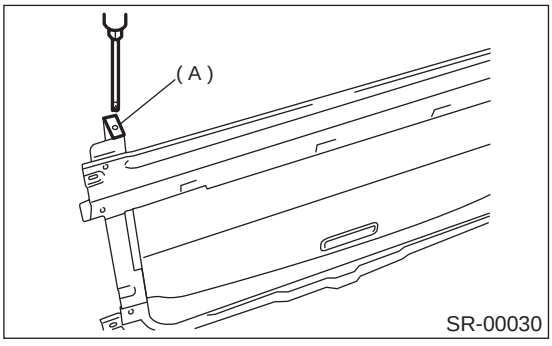

3) Pull out the sunshade (A) from sunroof frame.

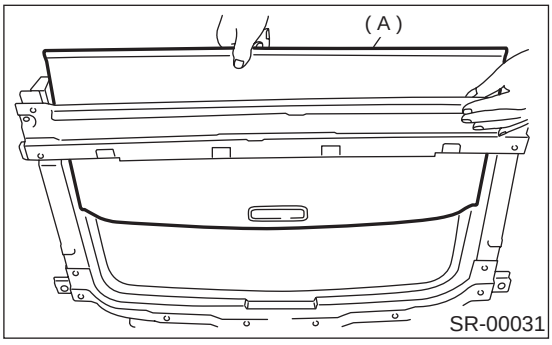

2. WAGON (REAR)

1) Remove rear sunroof frame.
2) Remove sunroof motor bracket mounting screws (A).
3) Remove rail stoppers (B) then pull the motor assembly (C) in the direction shown in the figure.

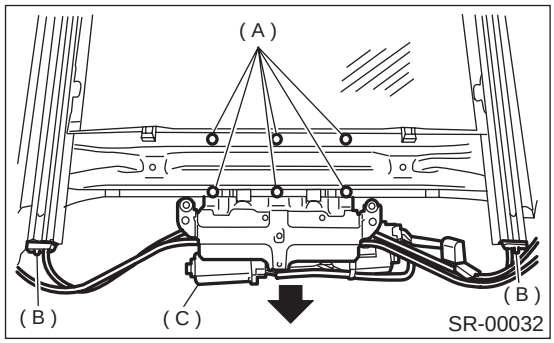

4) Pull out the sunshade (A) from sunroof frame.

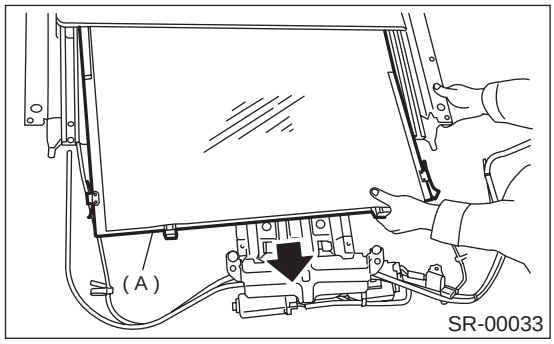

D: ASSEMBLY

Assemble in the reverse order of disassembly.

E: INSPECTION

1. CHECK FOR MOVEMENT OF SUN-SHADE

1) Place a cloth on sunshade, and attach a spring scale to sunshade edge using a cloth.

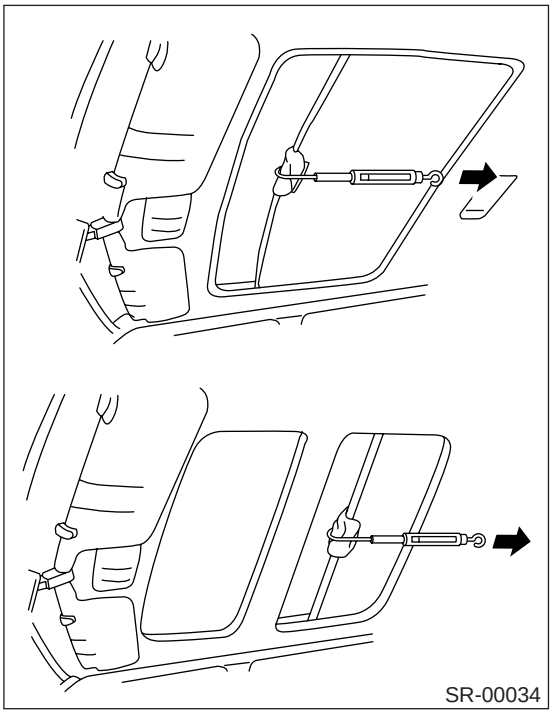

2) Pull spring scale to measure force required to move the sunshade.

Force required to move rear sunshade:
Less than 24.5±4.9 N (2.5±0.5 kgf, 5.5±1.1 lb)

NOTE:
Considerable force is required to start sunshade moving, so take a scale reading when it begins to move smoothly.

3) If the force required exceeds specifications, check the following points:
Sunroof lid, sunshade and guide rail assembly for improper installation

5. Sunroof Motor

A: REMOVAL

CAUTION:
When removing clip, use great care not to damage the roof trim.

1. SEDAN

1) Completely close the sunroof.
2) Disconnect ground cable from battery.
3) Remove sunroof lid. <Ref. to SR-6, SEDAN AND WAGON (REAR), REMOVAL, Sunroof Lid.>
4) Confirm the matching mark (A) of sunroof bracket link and the guide from sunroof opening. (If the mark does not match, adjust to match the mark.)

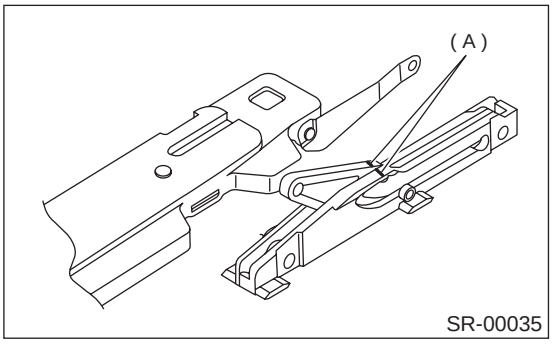

5) Remove roof trim. <Ref. to EI-42, SEDAN, REMOVAL, Roof Trim.>
6) Remove motor cover.

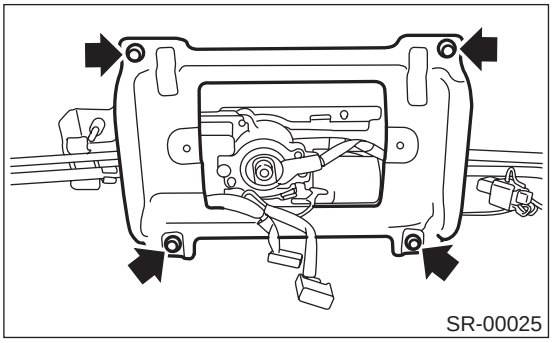

7) Disconnect harness connector and remove sunroof motor mounting screw.

2. WAGON

1) Completely close the front and rear sunroof, then tilt-up the front sunroof to the most upper position.
2) Disconnect ground cable from battery.
3) Remove rear sunroof lid. <Ref. to SR-6, SEDAN AND WAGON (REAR), REMOVAL, Sunroof Lid.>
4) Confirm the matching mark (A) of rear sunroof bracket link and the guide from sunroof opening. (If the mark does not match, adjust to match the mark.)

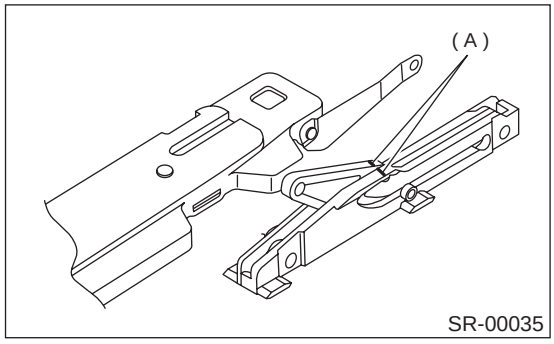

5) Remove luggage room light. <Ref. to LI-33, REMOVAL, Luggage Room Light.>
6) Remove rear assist grips.
7) Remove rear quarter trim. <Ref. to EI-40, WAGON, REMOVAL, Rear Quarter Trim.>
8) Remove cover (B) while detaching snap lock carefully. Put the rear center seat belt tongue (A) out to the other side of the trim through the hole.

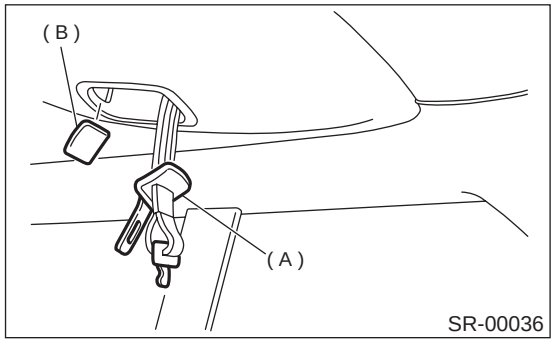

9) Remove clips and hang down rear end of roof trim.

10) Disconnect harness connector (A) and remove sunroof motor mounting screw (B).

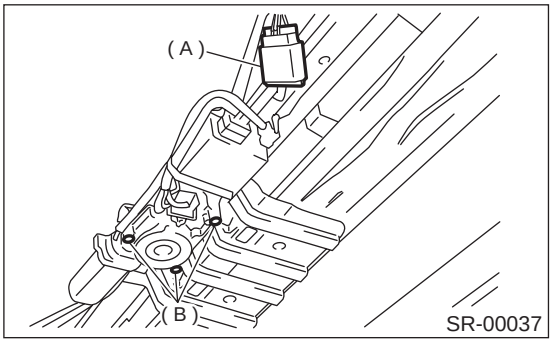

B: INSTALLATION

CAUTION:
• Never rotate the sunroof motor while removed.
• Be careful not to move the sunroof cable when installing sunroof motor.

1) Check the matching mark (A) of sunroof motor.

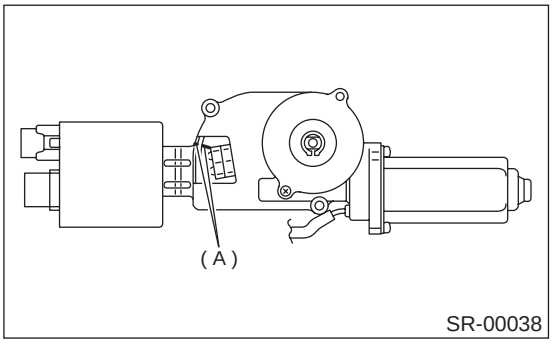

2) Confirm the matching mark (A) of sunroof bracket link.

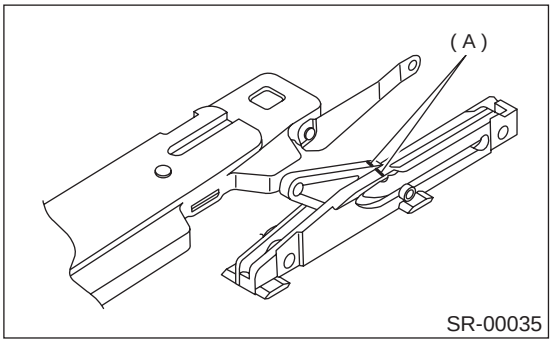

3) Install sunroof motor.
4) After installing the motor, reconfirm the matching marks of motor side and sunroof bracket link side.
5) Connect sunroof motor harness connector and then connect battery ground cable.
6) Check the sunroof operation with the procedure as shown in the table.

SEDAN

Operation	Switch position
(1) Completely close sunroof.	Closed
(2) Tilt-up sunroof to most upper position.	Tilt-up
(3) Lower sunroof completely.	Tilt-down
(4) Open sunroof to near the completely open position.	Open
(5) Completely open sunroof.	Open
(6) Close sunroof 150 mm (5.91 in) away from completely closed position.	Closed
(7) Completely close sunroof.	Closed

WAGON

Operation	Switch position
(1) Completely close front and rear sunroof.	Closed
(2) Tilt-up front sunroof to most upper position.	Open
(3) Open rear sunroof to near the completely open position.	Open
(4) Completely open front and rear sunroof.	Open
(5) Close rear sunroof 150 mm (5.91 in) away from completely closed position.	Closed
(6) Completely close rear sunroof.	Closed
(7) Lower front sunroof and completely close front and rear sunroof.	Closed

7) Install trims in the reverse order of removal.

6. Sunroof Switch

A: REMOVAL

1) Disconnect ground cable from battery.
2) Remove spot light lens (A) and sunroof switch mounting screw (B).

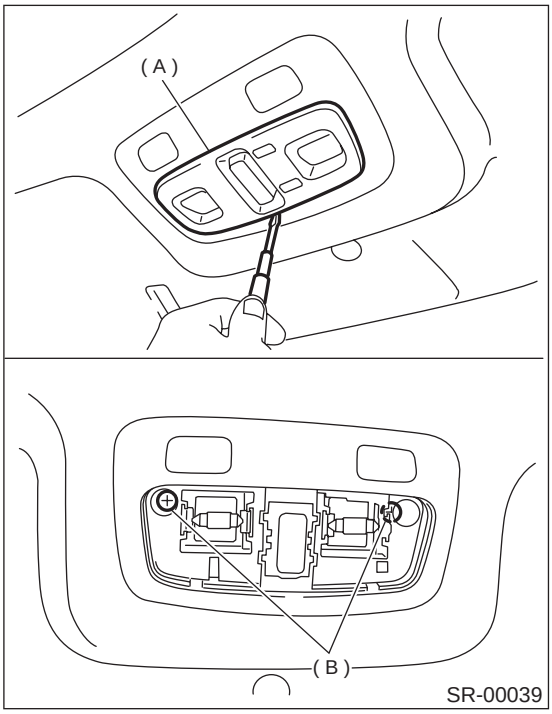

3) Disconnect harness connectors and remove sunroof switch.

B: INSTALLATION

Install in the reverse order of removal.

C: INSPECTION

1. SEDAN

Measure sunroof switch resistance.

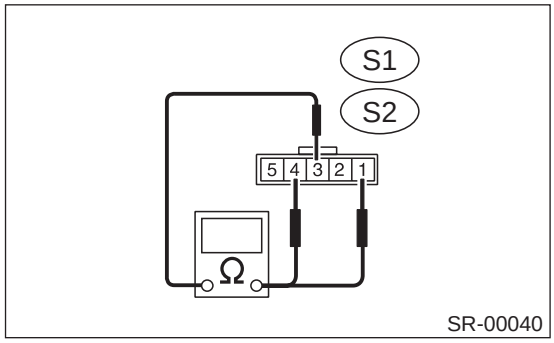

Switch position	Terminal No.	Standard
Open	S1: 3 and 4	Less than 1 Ω
Close	S1: 1 and 3	Less than 1 Ω
Tilt-up	S2: 3 and 4	Less than 1 Ω
Tilt-down	S2: 1 and 3	Less than 1 Ω

2. WAGON

Measure sunroof switch resistance.

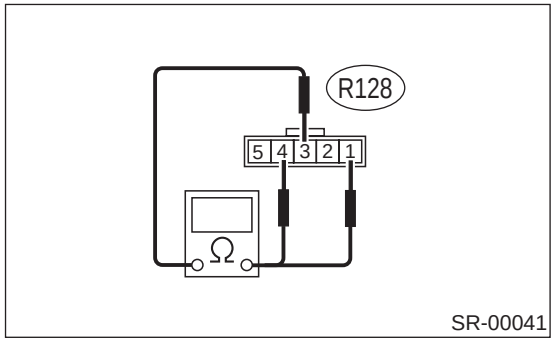

Switch position	Terminal No.	Standard
Open	3 and 4	Less than 1 Ω
Close	1 and 3	Less than 1 Ω